Internal Use Only

MOBILE PHONE
SERVICE MANUAL

CAUTION
BEFORE SERVICING THE UNIT, READ THE “SAFETY PRECAUTIONS” IN THIS MANUAL

MODEL : LG-H522y

Date: August 2015 / Issue 1.0

Table Of Contents

1. INTRODUCTION..... 3
1.1 Purpose
1.2 Regulatory Information

2. PERFORMANCE..... 4
2.1 Band Specification
2.2 HW Features
2.3 RSSI Display
2.4 Current consumption
2.5 Battery bar
2.6 SW Specification

3. TROUBLE SHOOTING.....10
3.1 Checking XO Block
3.2 Transceiver DC Power Supply
3.3 DC-DC Block
3.4 ASM Block
3.5 GSM RF Part
3.6 WCDMA RF Part
3.7 LTE RF Part
3.8 Power
3.9 Charger
3.10 Audio
3.11 LCD
3.12 Touch
3.13 Sensor
3.14 USB
3.15 CAMERA
3.16 Connectivity Part

4. BLOCK DIAGRAM..... 90

5. CIRCUIT DIAGRAM..... 99

6. BGA PIN MAP..... 118

7. PCB LAYOUT..... 119

8. HIDDEN MENU..... 126

9. DOWNLOAD..... 129

10. CALIBRATION.....130

11. DISASSEMBLE GUIDE..... 131

12. EXPLODED VIEW..... 132

13. REPLACEMENT PART LIST..... 134

Copyright © 2015 LG Electronics. Inc. All right reserved. Only training and service purposes

1.1 Purpose

This manual provides the information necessary to repair, calibration, description and download the features of this model.

1.2 Regulatory Information

A. Security

This material is prohibited to share and release to unauthorized person, in accordance with the regulations, LG Electronics, Civil / criminal responsibility in accordance with the relevant provisions violate.

B. Precautions for repair

- In case of Disassembly or Assembly to repair product, be careful of a product failure caused by RF signals and Static electricity.
- When using Magnetic tool for the Phone's SVC repair, you should check affect the Electric parts according to effect of Magnet.
- When fastening the screw, be careful not to damage the head of screw and even product.

C. Attention

Boards, which contain Electrostatic Sensitive Device (ESD), are indicated by the sign.

Following information is ESD handling:

- Service personal should ground themselves by using a wrist, strap when exchange system board.
- When repair are made to a system board, they should spread the floor with anti-static mat which is also grounded.
- Use a suitable, grounded soldering iron.
- Keep sensitive parts in these protective packages until these are used.
- When returning system board or parts like EEPROM to the Factory, use the protective package as described.

Copyright © 2015 LG Electronics. Inc. All right reserved. Only training and service purposes

2.1 Band Specification

Support Band	TX Freq (MHz)	RX Freq (MHz)
GSM850	824 – 849	869 – 894
GSM900	880 – 915	925 – 960
DCS1800	1710 – 1785	1805 – 1880
PCS1900	1850 – 1910	1930 – 1990
W2100(B1)	1920 – 1980	2110 – 2170
W850(B5)	824 – 849	869 – 894
W900(B8)	880 – 915	925 – 960
LTE B3	1710 – 1785	1805 – 1880
LTE B7	2500 – 2570	2620 – 2690
LTE B28	703 – 748	758 – 803
BT/WiFi	Bluetooth 4.0 + BLE / 802.11 b/g/n	
GPS	1574.42 MHz ~ 1576.42 MHz	

2.2 HW Features

Item	Feature	Comment
Phone type	Touch	
Size	69.8 X 139.7 X 10.2 mm	
Weight	134g(Tocad) / 136g(LGC)	With Battery
Android OS	L-OS	
MTK Chipset	MT6732	
Memory	8GB eMMC/1GB RAM	
Display	5” HD (1280X720)	
Camera	8MP AF / 5MP VT	
Micro SD	Up to 32GB	
Audio	Receiver 1206 Speaker 1511 # of MIC. : 2	
Bluetooth	4.0	
WLAN	802.11 b/g/n	
LTE	B3,B7,B28	
GPS	A-GPS	Glonass

Copyright © 2015 LG Electronics. Inc. All right reserved. Only training and service purposes

2.3 RSSI Display

Antenna BAR	Specification		
	LTE (RSRP) (B3/B7/B28)	WCDMA (RSCP) (B1/B5/B8)	GSM (RSSI) (850/EGSM/DCS /PCS)
5→4	-85 ± 3	-89 ± 3	-91 ± 3
4→3	-95 ± 3	-94 ± 3	-96 ± 3
3→2	-105 ± 3	-100 ± 3	-99 ± 3
2→1	-115 ± 3	-104 ± 3	-103 ± 3
1→0	-128 ± 3	-110 ± 3	-105 ± 3
0 → No SVC	-131 ↓	-115 ↓	-110 ↓

2.4 Current consumption

	Specification		
	GSM	WCDMA	LTE
Stand by current (Sleep & Idle Avg.)	` BT off : 8 mA (PP = 5) ` BT on : 11 mA (PP = 5)	` BT off : 8 mA (DRX = 7) ` BT on : 11 mA (DRX = 7)	` BT off : 8 mA (DRX = 2.56sec) ` BT on : 11 mA (DRX = 2.56sec)
Talk current	370 mA (TX Level = Max)	250 mA (TX = 10dBm)	370 mA (Tx= 10dBm)
Power off	500uA		

Copyright © 2015 LG Electronics. Inc. All right reserved. Only training and service purposes

2.5 Battery bar

Battery Bar	Specification	Battery Bar	Specification
Bar 20(Full)	98%이상	Bar 9 -> Bar 8	43% -> 42%
Bar 20 -> Bar 19	98% -> 97%	Bar 8 -> Bar 7	38% -> 37%
Bar 19 -> Bar 18	93% -> 92%	Bar 7 -> Bar 6	33% -> 32%
Bar 18 -> Bar 17	88% -> 87%	Bar 6 -> Bar 5	28% -> 27%
Bar 17 -> Bar 16	83% -> 82%	Bar 5 -> Bar 4	23% -> 22%
Bar 16 -> Bar 15	78% -> 77%	Bar 4 -> Bar 3	16% -> 15%
Bar 15 -> Bar 14	73% -> 72%	Bar 3 -> Bar 2	13% -> 12%
Bar 14 -> Bar 13	68% -> 67%	Bar 2 -> Bar 1	8% -> 7%
Bar 13 -> Bar 12	63% -> 62%	Bar 1 -> Bar 0	3% -> 2%
Bar 12 -> Bar 11	58% -> 57%	Power off	1% -> 0%
Bar 11 -> Bar 10	53% -> 52%	Low battery pop-up	15% , 5%, 1%
Bar 10 -> Bar 9	48% -> 47%		

※Cut Off Voltage : 3.4 ± 0.1 V

Copyright ⓒ 2015 LG Electronics. Inc. All right reserved. Only training and service purposes

2.6 SW Specification

Item	Feature	Comment
RSSI	0 ~ 5 Levels	
Battery Charging	0 ~ 20 Levels	
Key Volume	0 ~ 7 Level	
Audio Volume	0 ~ 15 Level	
Time / Date Display	Yes	
Multi-Language	Yes	depending on build language
PC Sync	Yes	
Speed Dial	Yes	
CLIP / CLIR	Yes	
Phone Book	Name / Number / Email / Groups / Postal addresses / Organizations / IM / Note / Nickname / Website / Event /	There is no limitation on the number of items. It depends on available memory amount.
Last Dial Number	Yes	
Last Received Number	Yes	
Last Missed Number	Yes	
Search by Number/Name	Yes	
Group	Yes	There is no limitation on the number of items. It depends on available memory amount.
Fixed Dial Number	Yes	
Voice Memo	Yes	Support voice recorder
Network Selection	Automatic	
Mute	Yes	
Call Divert	Yes	
Call Barring	Yes	
Call Duration	Yes	
SMS Over GPRS	Yes	
MMS MPEG4 Send / Receive / Save	Yes	ØSend / Receive : Yes ØSave : depends on content type/ Support video content type list 1.video/mp4 2.video/h263 3.video/3gpp2 video/3gpp

Copyright © 2015 LG Electronics. Inc. All right reserved. Only training and service purposes

2.6 SW Specification

Voice Memo	Yes	Support voice recorder
Network Selection	Automatic	
Mute	Yes	
Call Divert	Yes	
Call Barring	Yes	
Call Charge (AoC)	No	
Call Duration	Yes	
SMS (EMS)	There is no limitation on the number of items . It depends on available memory amount.	EMS does not support.
SMS Over GPRS	Yes	
EMS Melody / Picture Send / Receive / Save	No	
MMS MPEG4 Send / Receive / Save	Yes	➢ **Send / Receive** : Yes ➢ **Save** : depends on content type Support video content type li st 1. video/mp4 2. video/h263 3. video/3gpp2 video/3gpp
Long Message	MAX 2000 characters	The standard of Open vender
Cell Broadcast	Yes	
Download	Over the Web	
Calendar	Yes	
Memo	Yes	There is no limitation on the number o f items. It depends on available memory amo unt.
World Clock	Yes	

Copyright © 2015 LG Electronics. Inc. All right reserved. Only training and service purposes

2.6 SW Specification

Item	Feature	Comment
Long Message	It depends on sim inserted	
Cell Broadcast	Yes	
Download	Over the Web	
Calendar	Yes	
Memo	Yes	There is no limitation on the number of it ems. It depends on available memory amount .
World Clock	Yes	
Stop Watch	Yes	
Wall Paper	Yes	
SIM Toolkit	Yes	
MMS	Yes	LG MMS Client
CPHS	Yes	
Camera	Yes	8M AF / Digital Zoom : x4
Bluetooth	Yes	Ver. 4.1
FM radio	Yes	
GPRS	Yes	class 33
EDGE	Yes	class 33
Hold / Retrieve	Yes	
Conference Call	Yes	Max. 6
DTMF	Yes	
AMR	Yes	
IM	Yes	Google Hangout
Email	Yes	

Copyright © 2015 LG Electronics. Inc. All right reserved. Only training and service purposes

3.1 Checking XO Block

The out put frequency(26MHz) of VTCXO(X1500) is used as the reference one of MT6169

Checking Flow

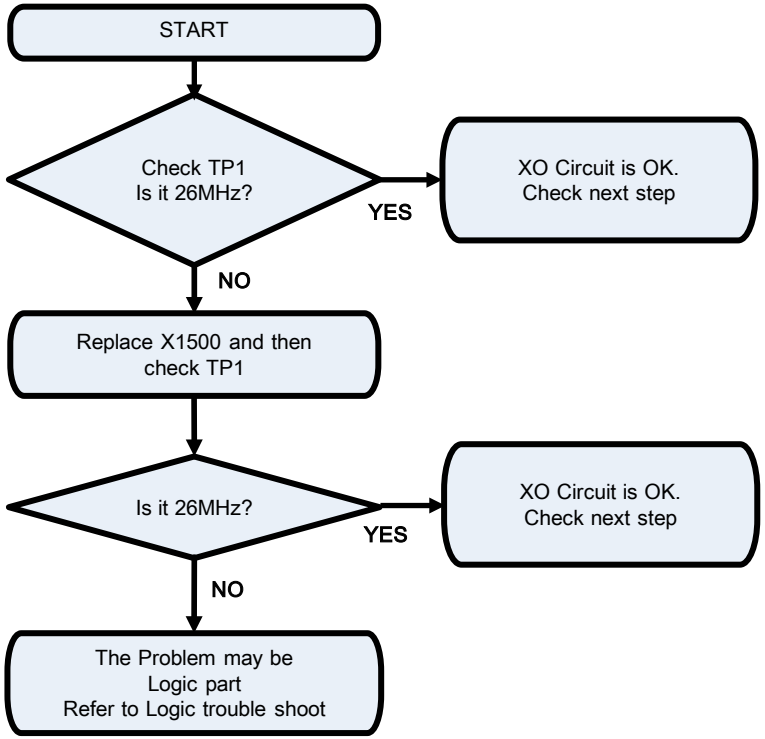

Image

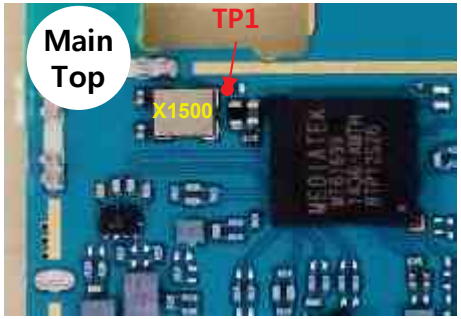

Circuit Diagram

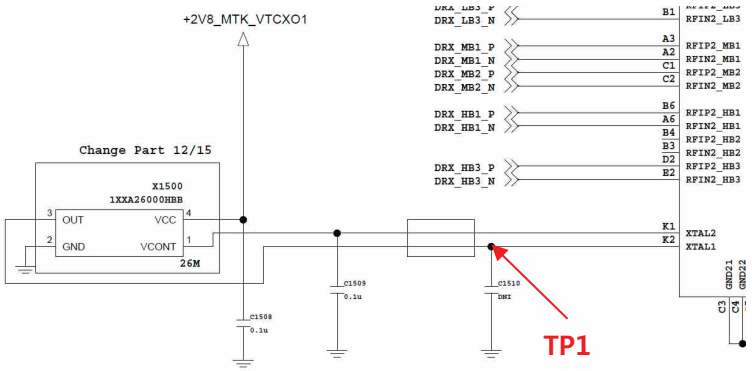

Copyright © 2015 LG Electronics. Inc. All right reserved. Only training and service purposes

3.2 Checking Transceiver DC Power Supply Circuit Block

The MT6169 operating voltages used two voltage sources 1.8V and 2.8V

Checking Flow

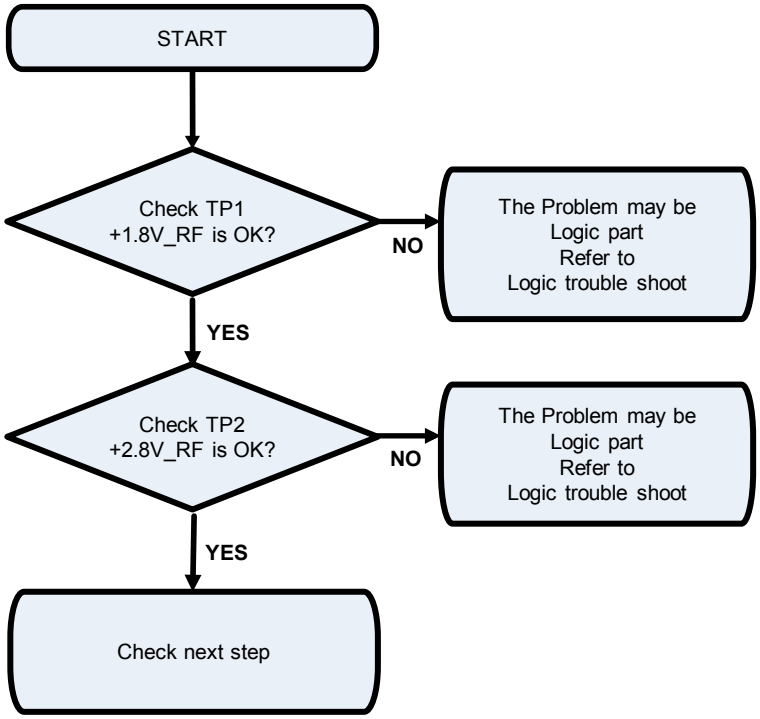

Image

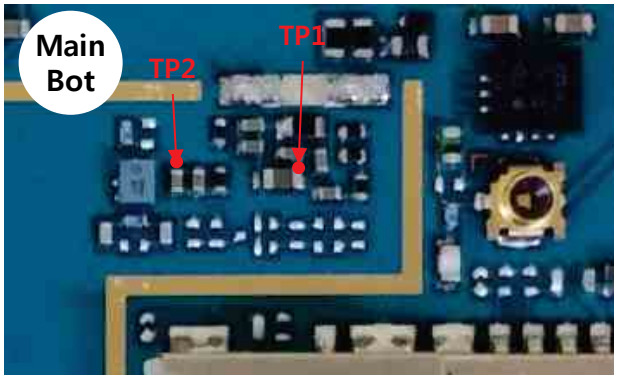

Circuit Diagram

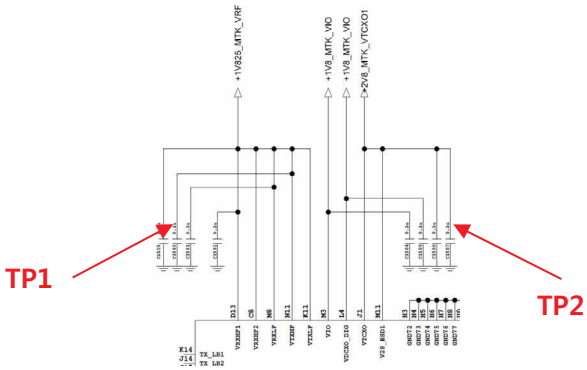

Copyright © 2015 LG Electronics. Inc. All right reserved. Only training and service purposes

3.3 Checking DC-DC Block

The DC-DC(MT6325, U4100) output voltages is used as the reference one of SKY77621

Checking Flow

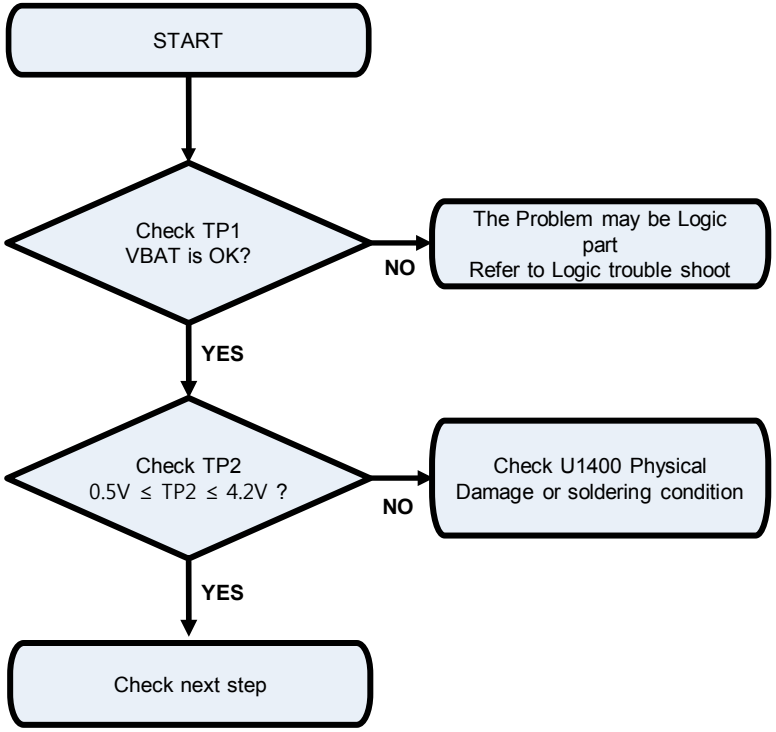

Image

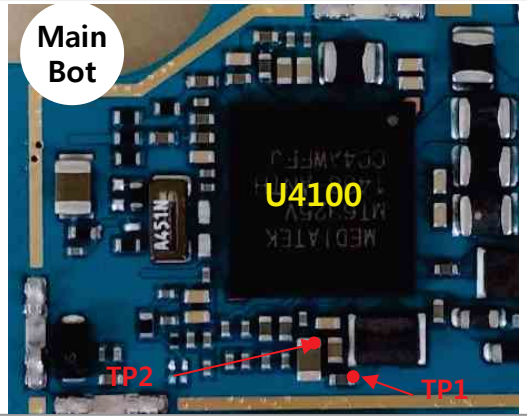

Circuit Diagram

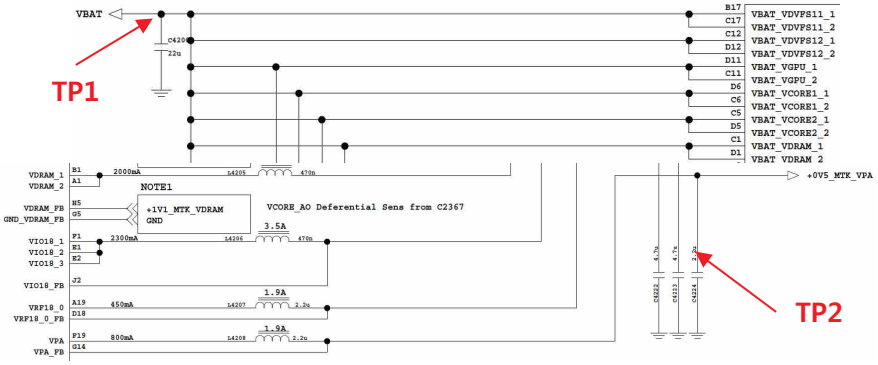

Copyright © 2015 LG Electronics. Inc. All right reserved. Only training and service purposes

3.4 ASM(Antenna Switch Module) Block

3.4.1 Checking ANT #1 ASM (GSM 850/900, W B5/8, LTE B7/28)

Checking Flow

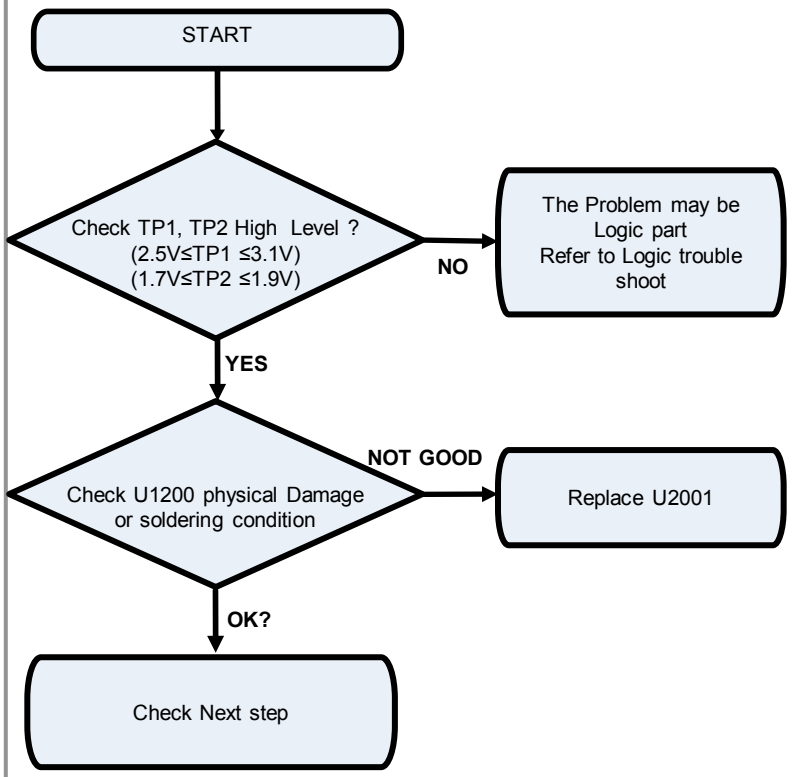

Image

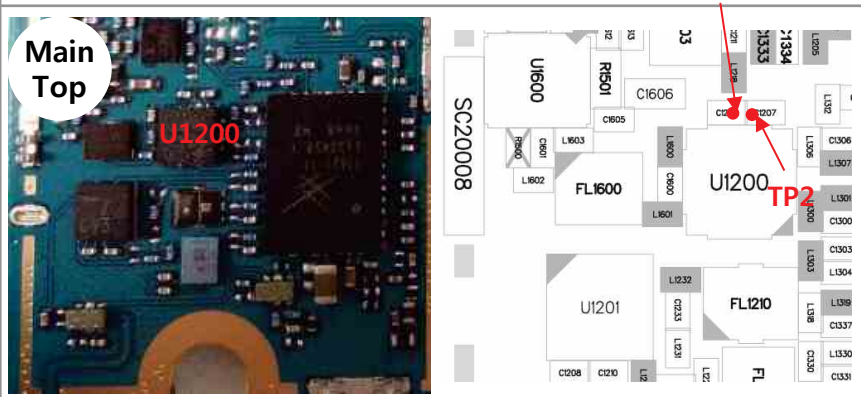

Circuit Diagram

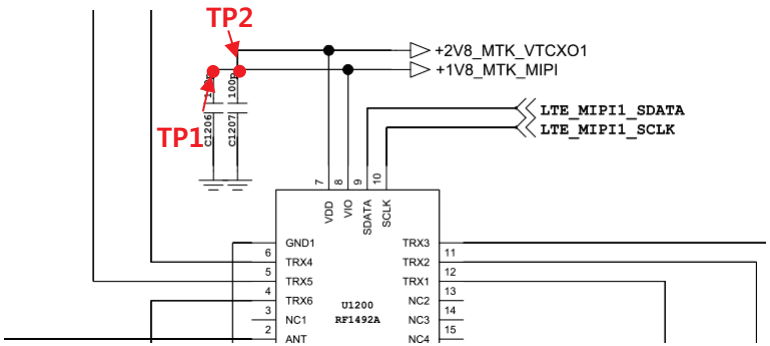

Copyright © 2015 LG Electronics. Inc. All right reserved. Only training and service purposes

3.4 ASM(Antenna Switch Module) Block

3.4.2 Checking ANT #2 ASM (GSM 1800/1900, W B1, LTE B3)

Checking Flow

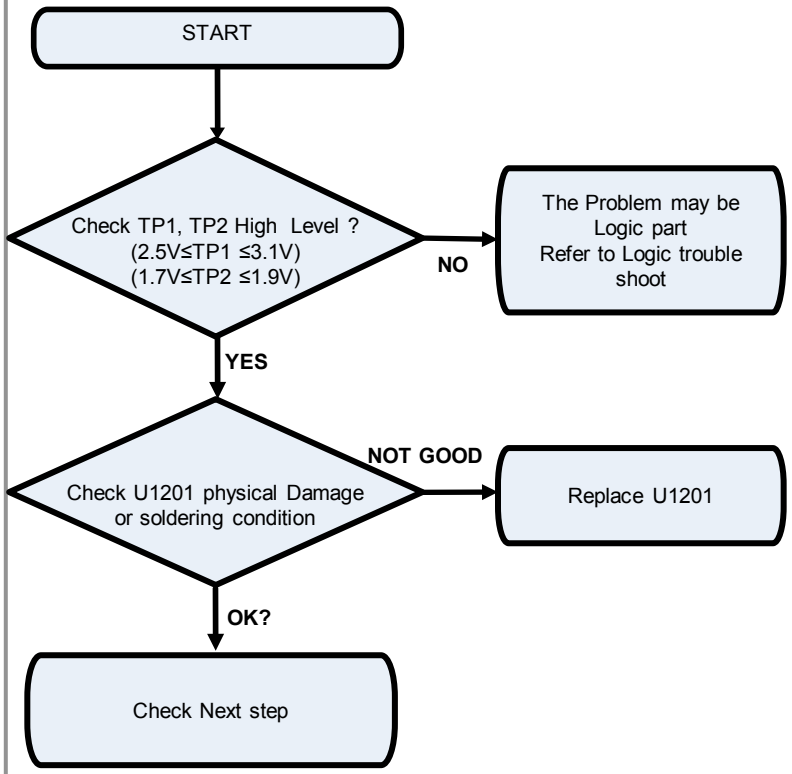

Image

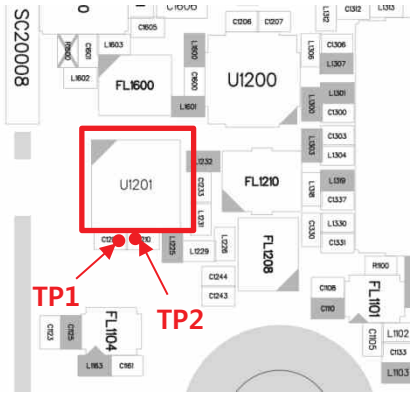

Circuit Diagram

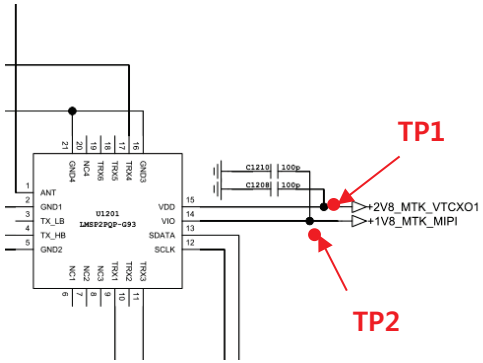

Copyright © 2015 LG Electronics. Inc. All right reserved. Only training and service purposes

3.5 GSM RF PART

GSM RF Part support GSM850/900/1800/1900 with ASM, PAM, Transceiver component

Checking Flow

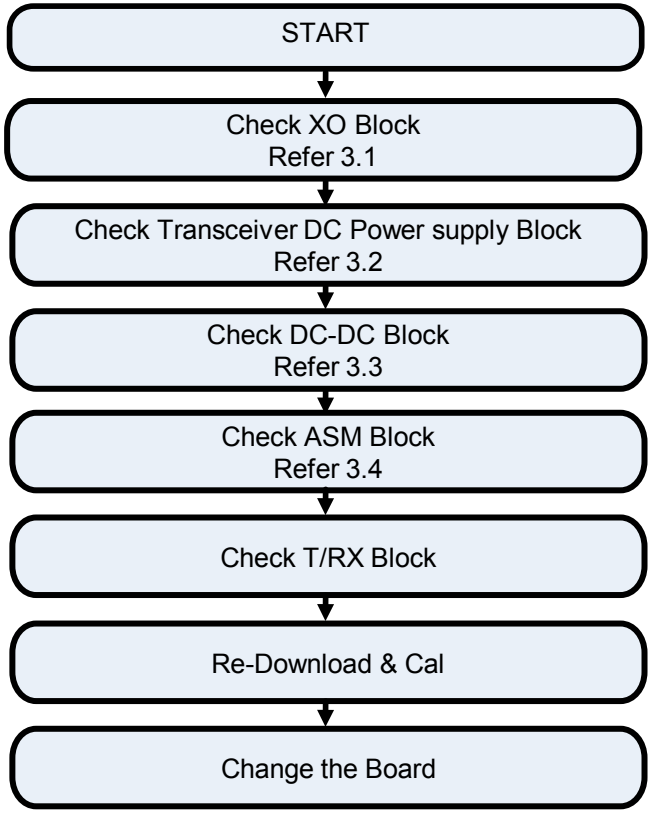

Copyright © 2015 LG Electronics. Inc. All right reserved. Only training and service purposes

3.5 GSM RF PART

3.5.1 GSM RF Part RX RF PATH

Image

1. GSM850 RX PATH
2. GSM900 RX PATH
3. GSM1800 RX PATH
4. GSM1900 RX PATH

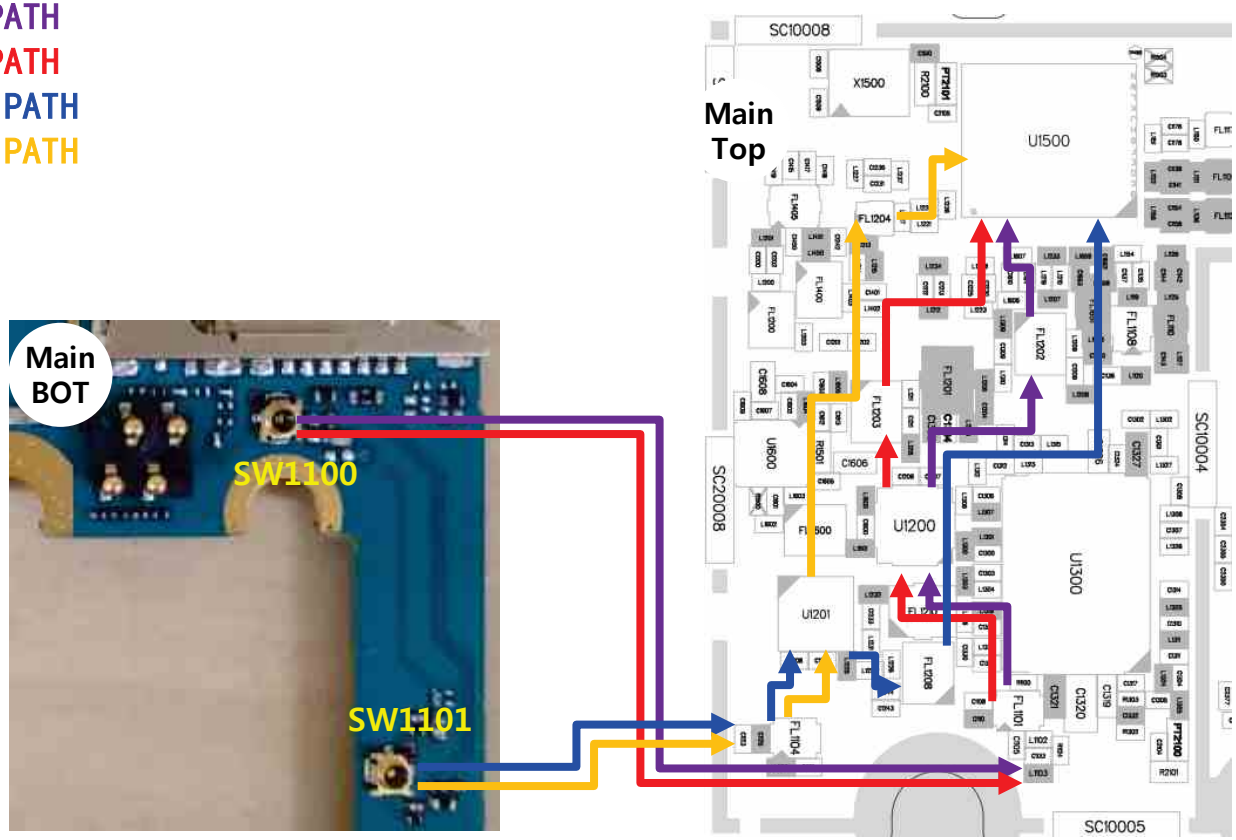

Copyright © 2015 LG Electronics. Inc. All right reserved. Only training and service purposes

3.5 GSM RF PART

3.5.2 Checking RF Signal RX path(SW, GSM850/900)

Checking Flow

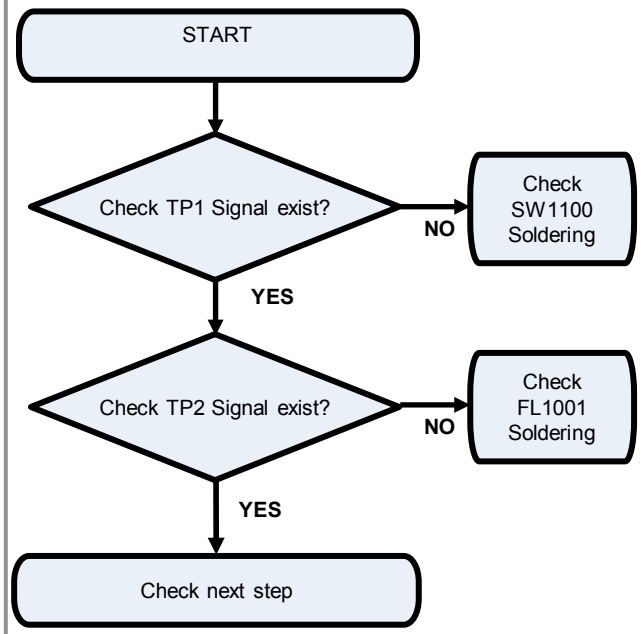

Image

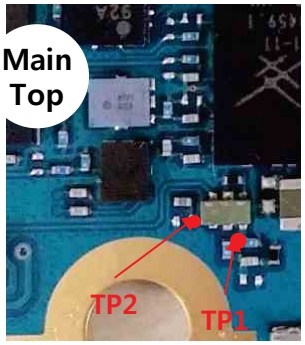

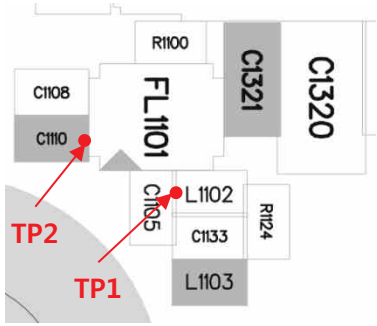

Circuit Diagram

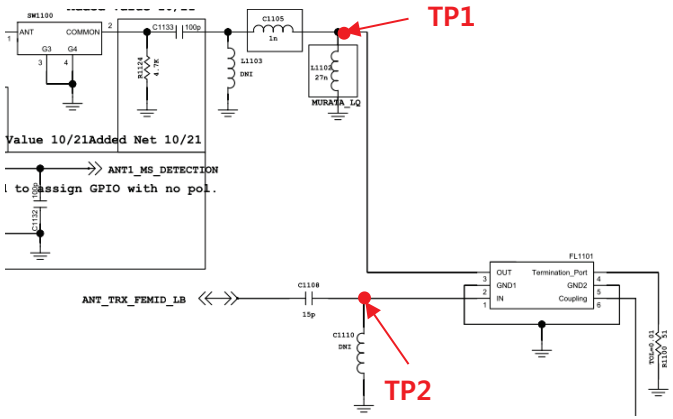

Copyright © 2015 LG Electronics. Inc. All right reserved. Only training and service purposes

3.5 GSM RF PART

3.5.3 Checking RF Signal RX path(GSM850/900)

Checking Flow

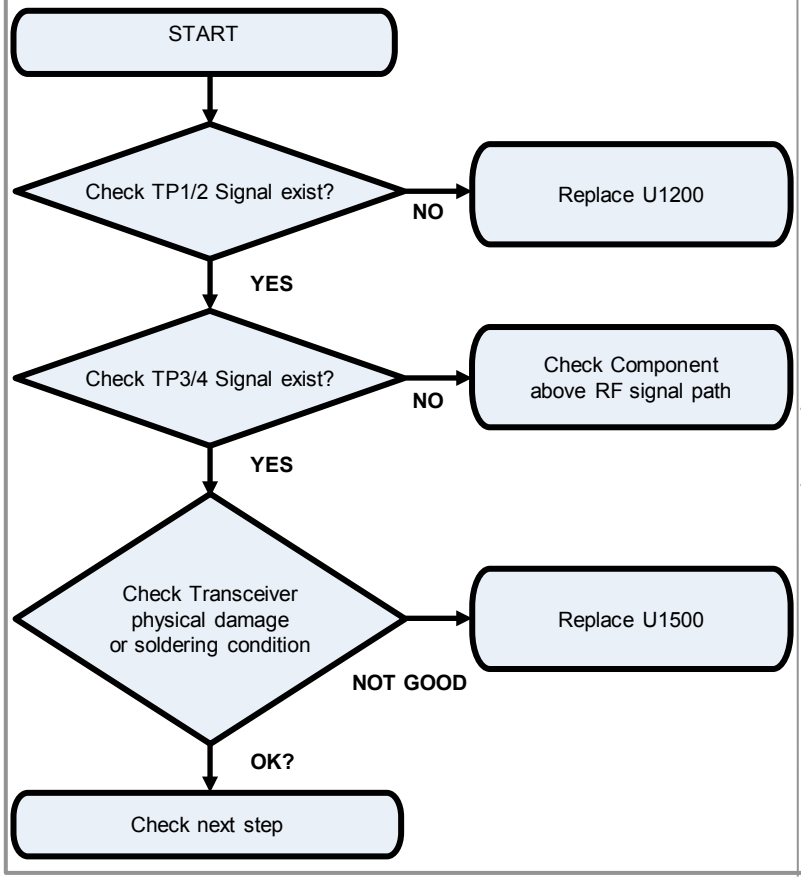

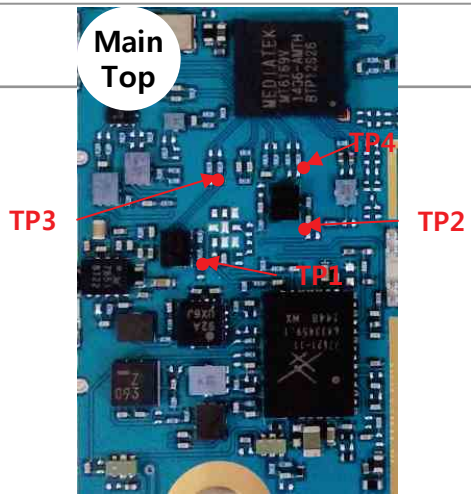

Circuit Diagram

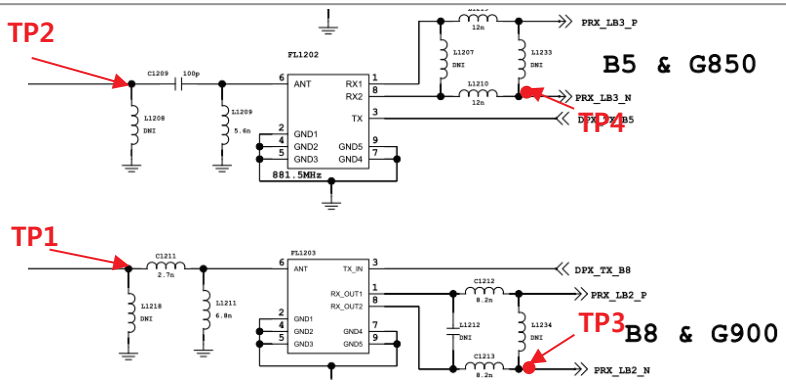

Copyright © 2015 LG Electronics. Inc. All right reserved. Only training and service purposes

3.5 GSM RF PART

3.5.4 Checking RF Signal RX path(SW, GSM1800/1900)

Checking Flow

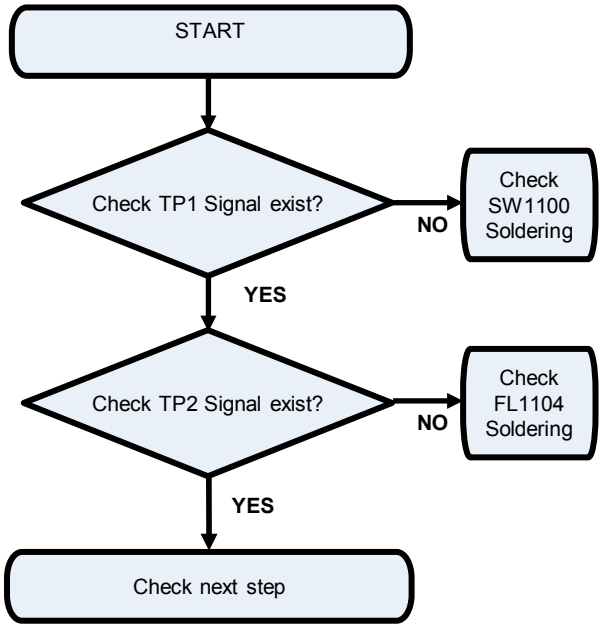

Image

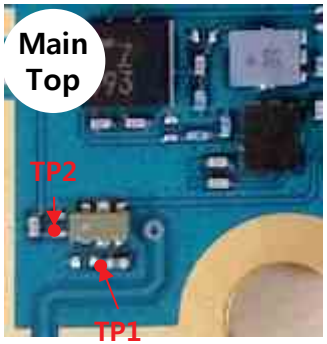

Circuit Diagram

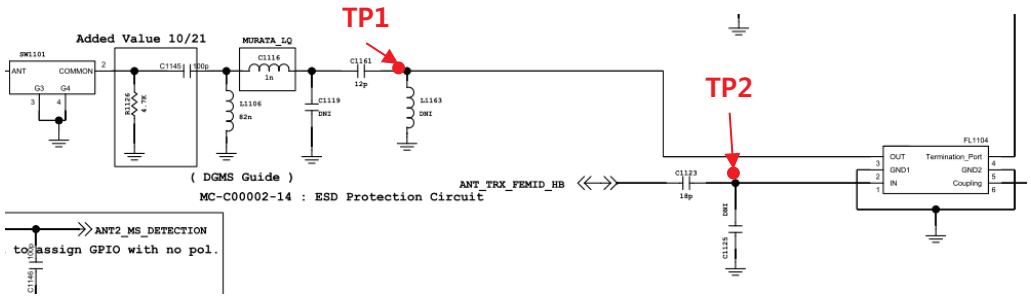

Copyright © 2015 LG Electronics. Inc. All right reserved. Only training and service purposes

3.5 GSM RF PART

3.5.5 Checking RF Signal RX path(GSM1800/1900)

Checking Flow

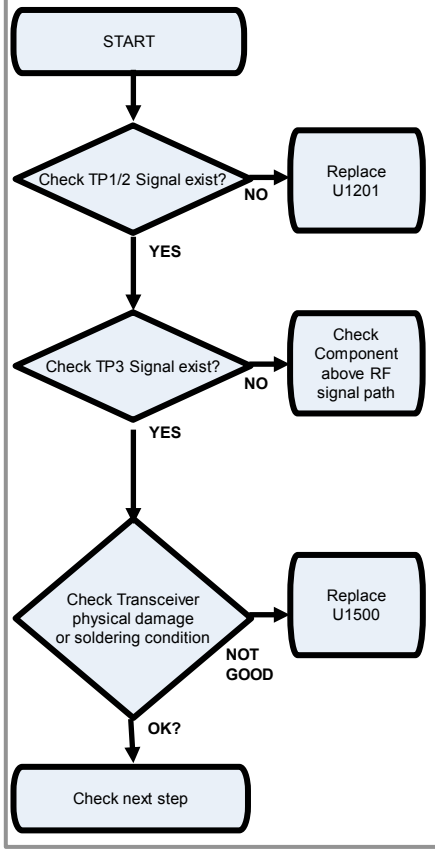

Image

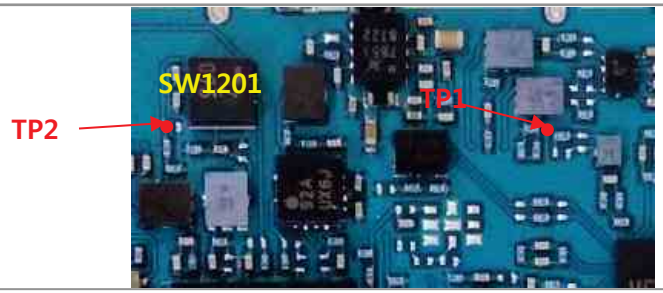

Circuit Diagram

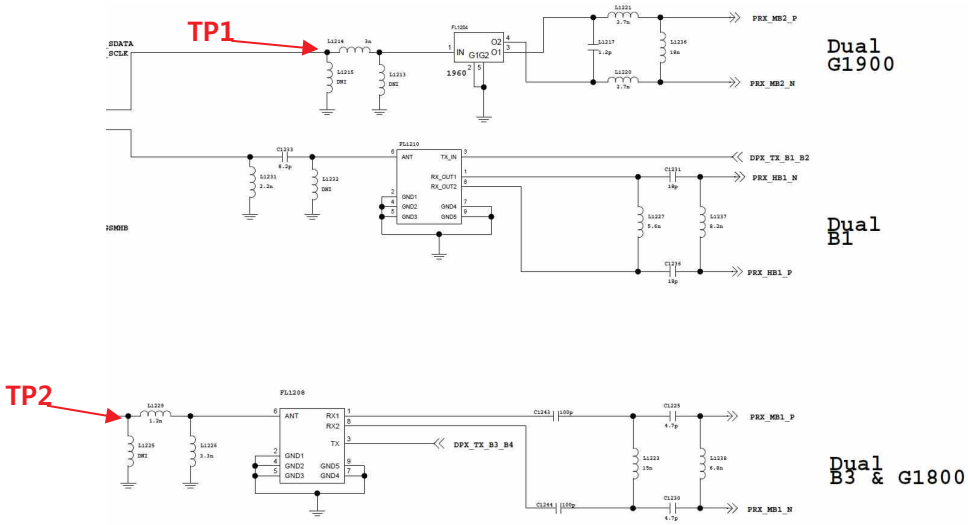

Copyright © 2015 LG Electronics. Inc. All right reserved. Only training and service purposes

3.5 GSM RF PART

3.5.6 GSM RF Part TX RF PATH

1. GSM850/900 TX PATH
2. GSM1800/1900 TX PATH

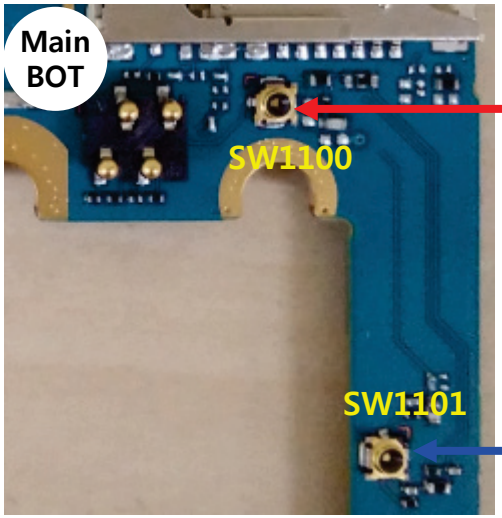

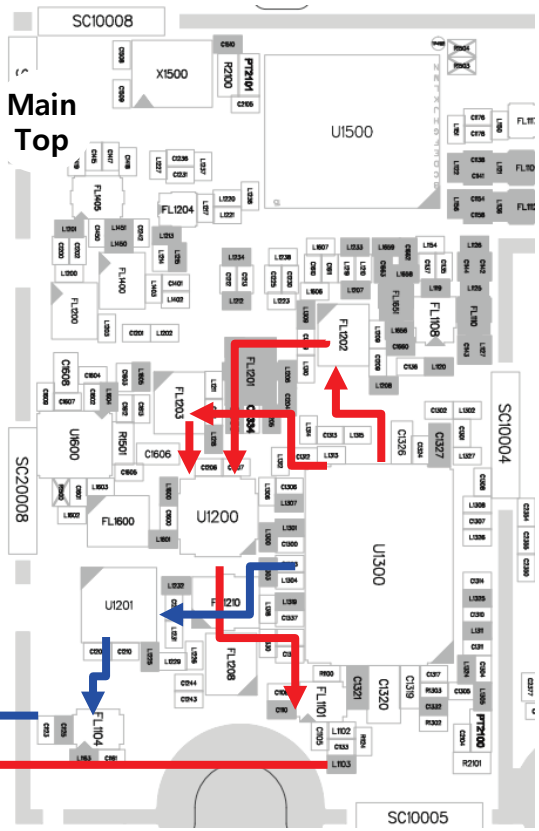

Copyright © 2015 LG Electronics. Inc. All right reserved. Only training and service purposes

3.5 GSM RF PART

3.5.7 Checking GSM PAM DC Power Circuit

Checking Flow

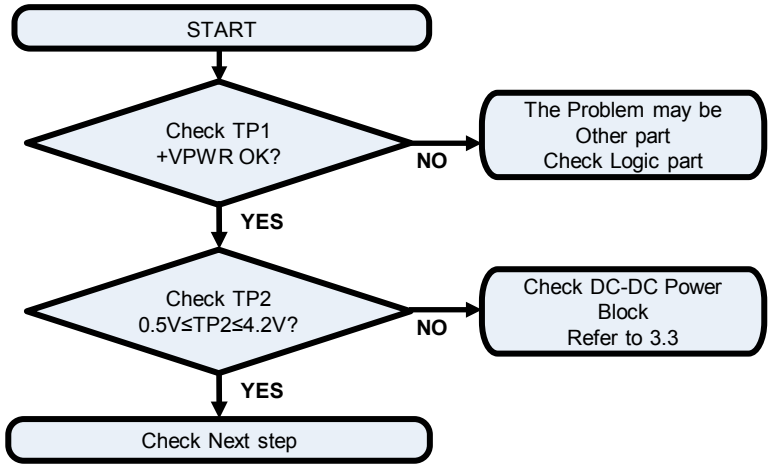

Image

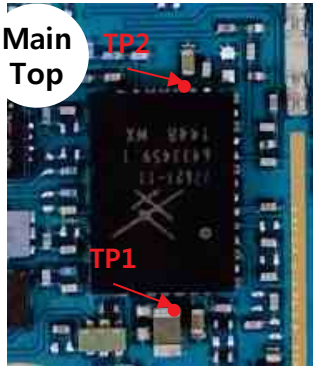

Circuit Diagram

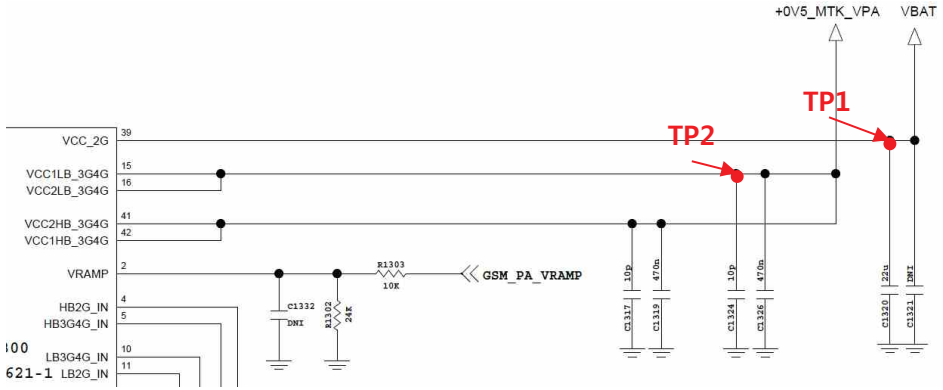

Copyright © 2015 LG Electronics. Inc. All right reserved. Only training and service purposes

3.5 GSM RF PART

3.5.8 Checking RF Signal TX path(SW, GSM850/900)

Checking Flow

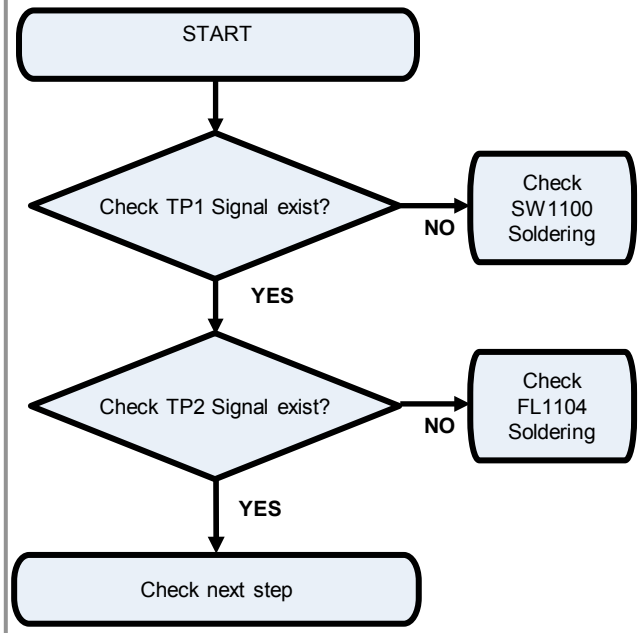

Image

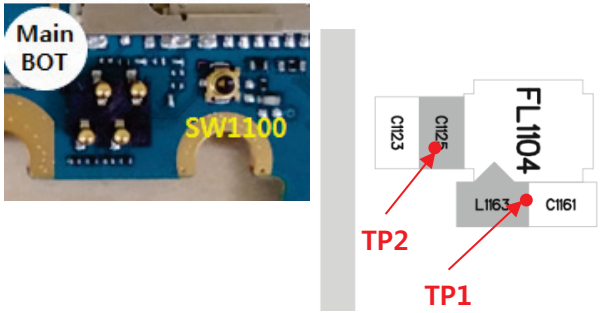

Circuit Diagram

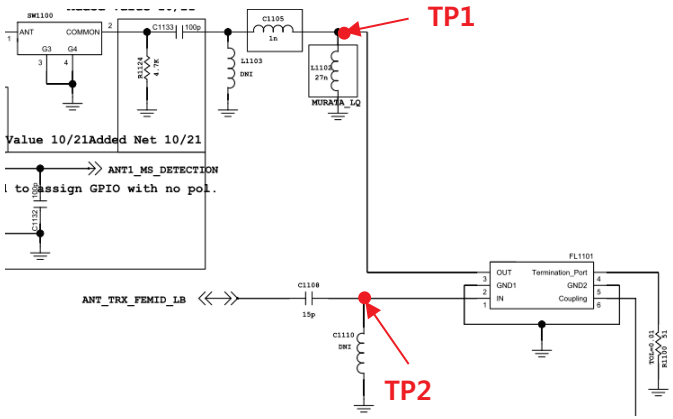

Copyright © 2015 LG Electronics. Inc. All right reserved. Only training and service purposes

3.5 GSM RF PART

3.5.9 Checking RF Signal TX path(GSM850/900)

Checking Flow	Image
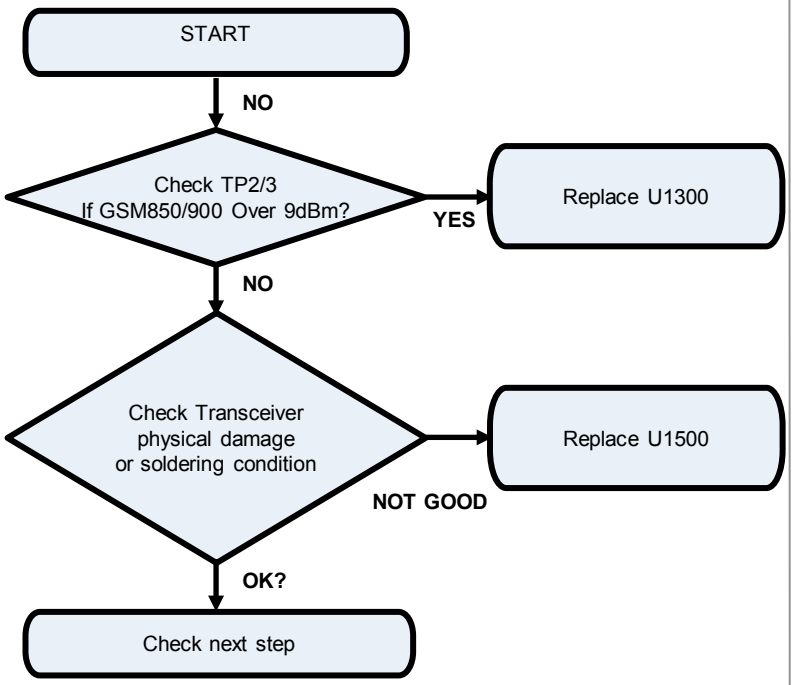	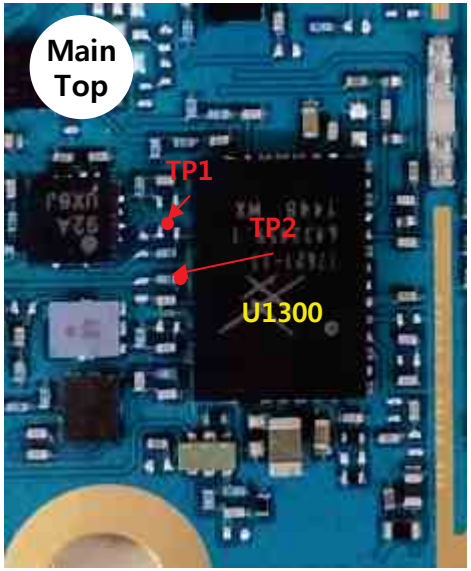

Copyright © 2015 LG Electronics. Inc. All right reserved. Only training and service purposes

3.5 GSM RF PART

3.5.9 Checking RF Signal TX path(GSM850/900)

Circuit Diagram

Copyright © 2015 LG Electronics. Inc. All right reserved. Only training and service purposes

3.5 GSM RF PART

3.5.10 Checking RF Signal TX path(SW, GSM1800/1900)

Checking Flow

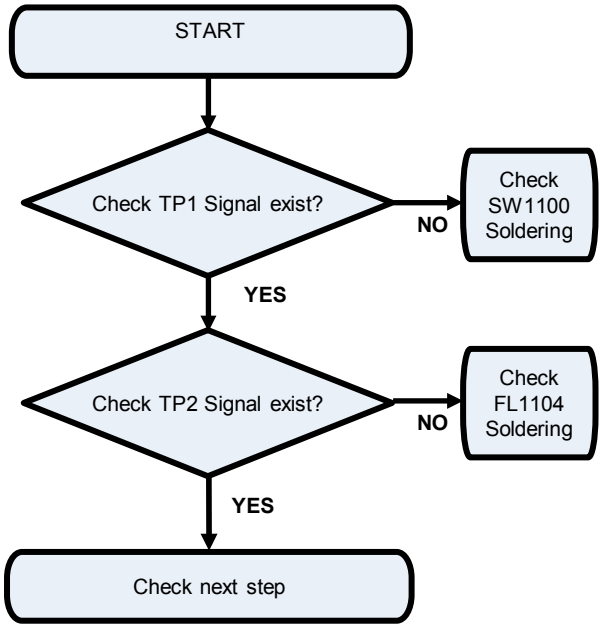

Image

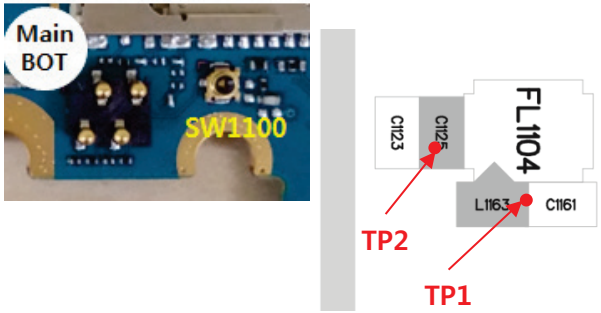

Circuit Diagram

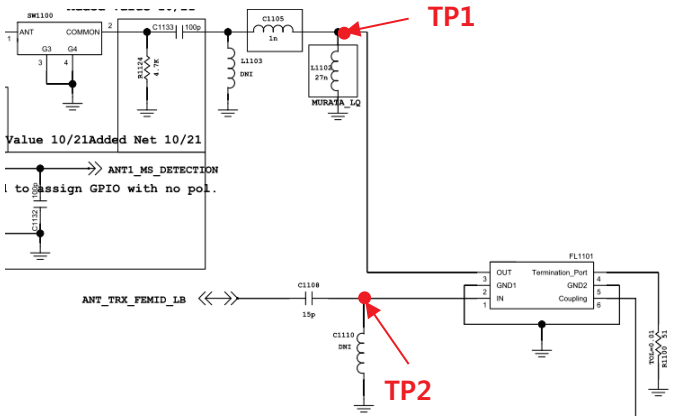

Copyright © 2015 LG Electronics. Inc. All right reserved. Only training and service purposes

3.5 GSM RF PART

3.5.11 Checking RF Signal TX path(GSM1800/1900)

Checking Flow	Image
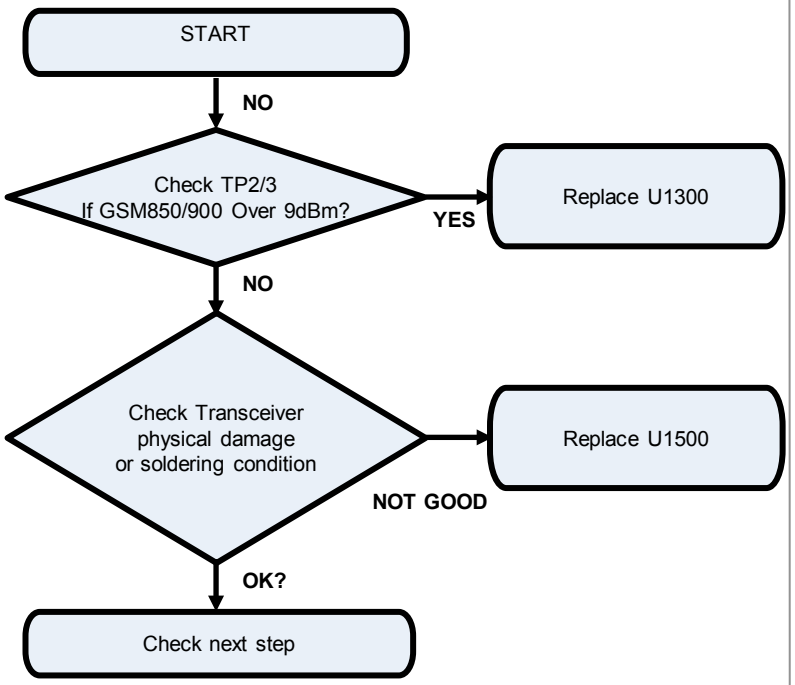	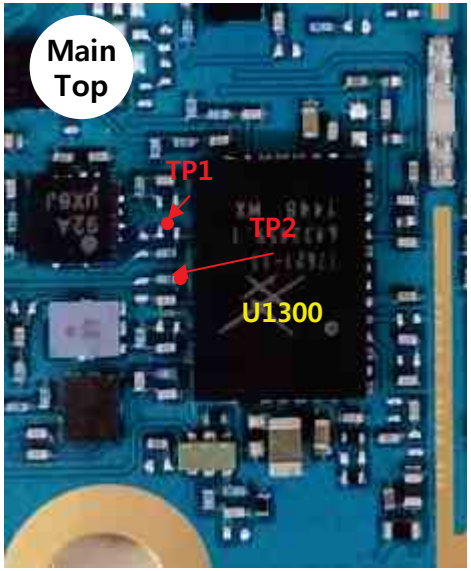

Copyright © 2015 LG Electronics. Inc. All right reserved. Only training and service purposes

3.5 GSM RF PART

3.5.11 Checking RF Signal TX path(GSM1800/1900)

Circuit Diagram

Copyright © 2015 LG Electronics. Inc. All right reserved. Only training and service purposes

3.6 WCDMA RF PART

WCDMA RF Part support WCDMA B1/5/8 with ASM, PAM, Transceiver component

Checking Flow

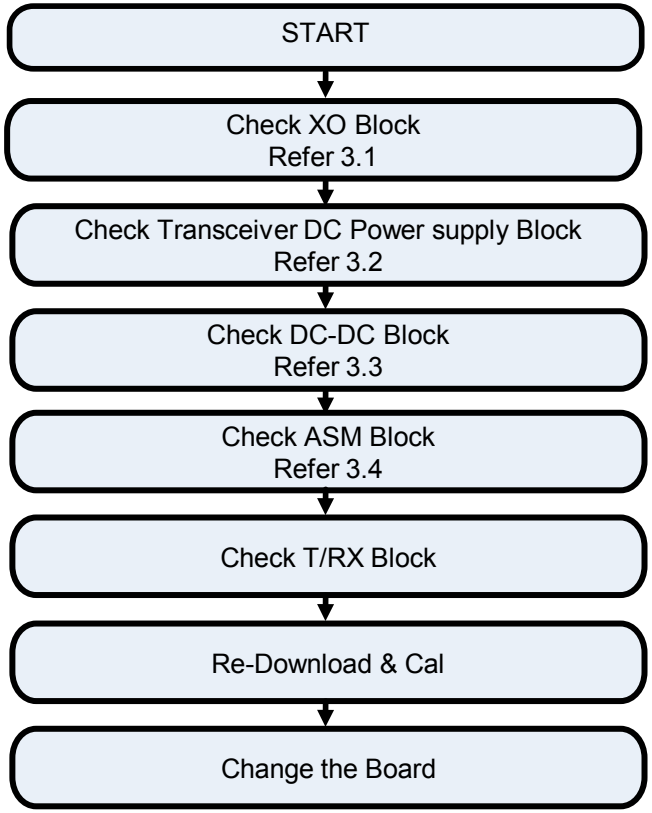

Copyright © 2015 LG Electronics. Inc. All right reserved. Only training and service purposes

3.6 WCDMA RF PART

3.6.1 WCDMA RF Part RX RF PATH

Image

1. WCDMA B1 RX PATH
2. WCDMA B5 RX PATH
3. WCDMA B8 RX PATH

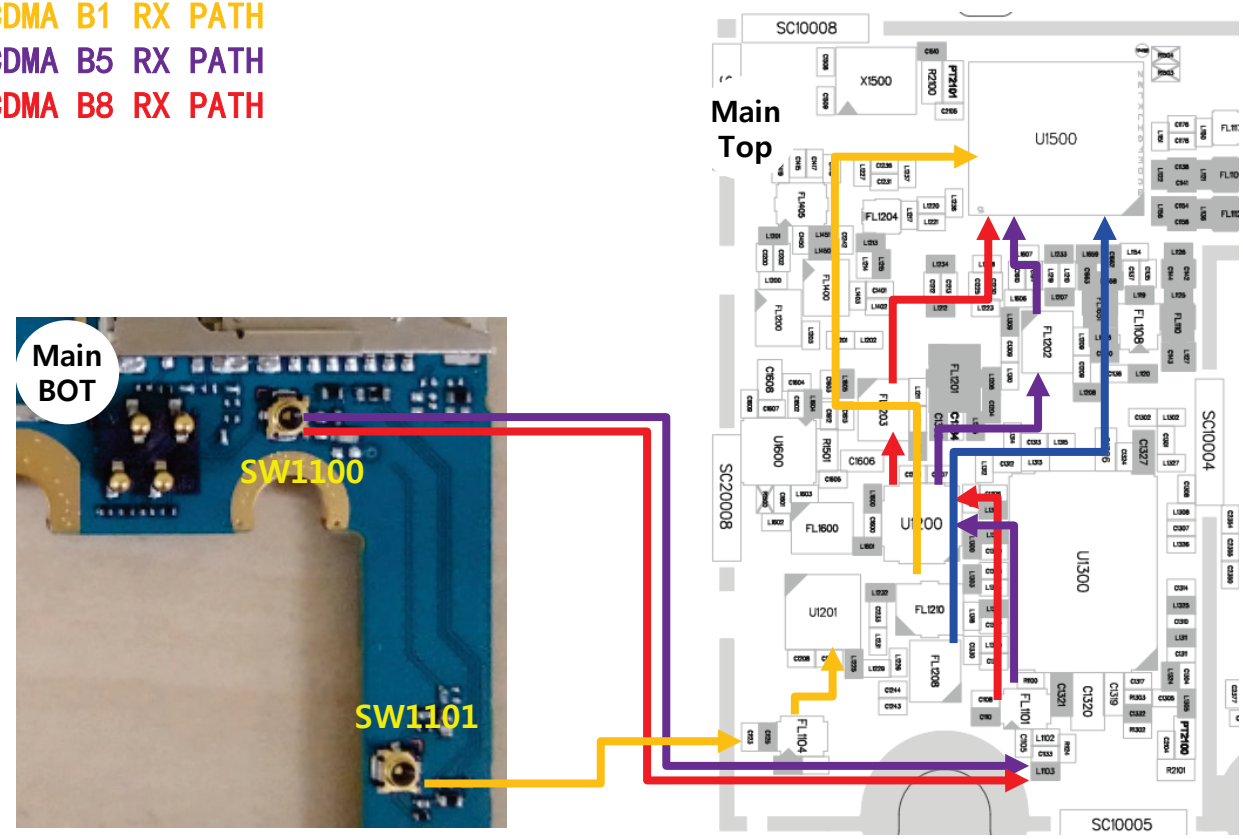

Copyright © 2015 LG Electronics. Inc. All right reserved. Only training and service purposes

3.6 WCDMA RF PART

3.6.2 Checking RF Signal RX path(SW, WCDMA B1)

Checking Flow

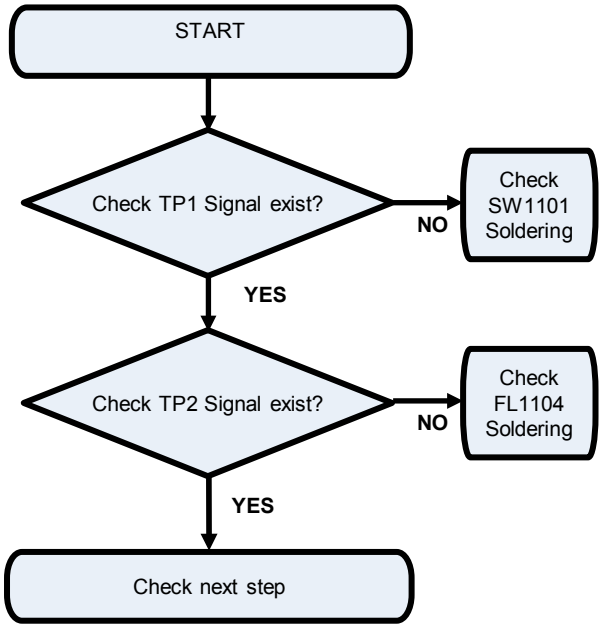

Image

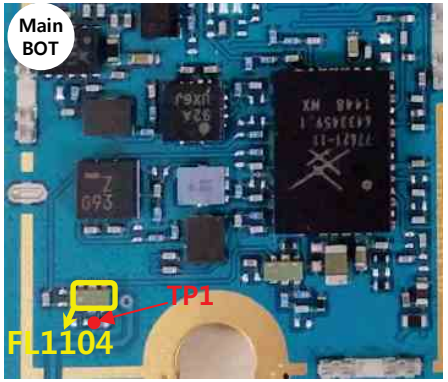

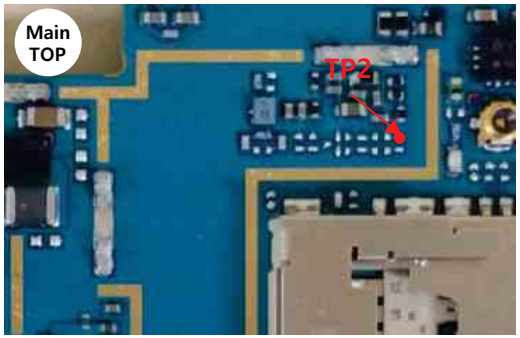

Circuit Diagram

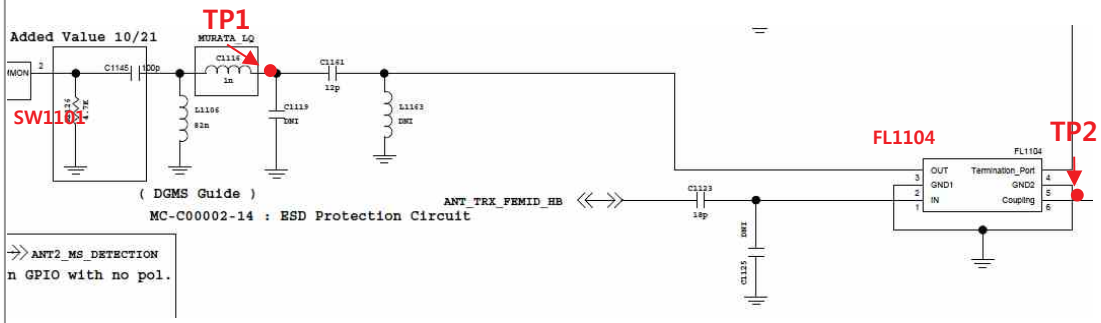

Copyright © 2015 LG Electronics. Inc. All right reserved. Only training and service purposes

3.6 WCDMA RF PART

3.6.3 Checking RF Signal RX path(WCDMA B1)

Checking Flow

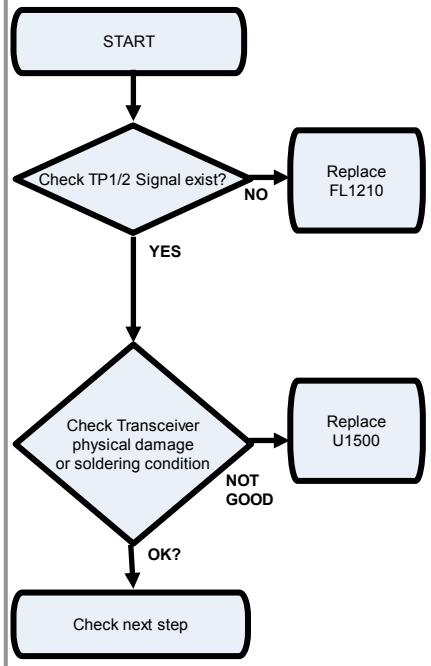

Image

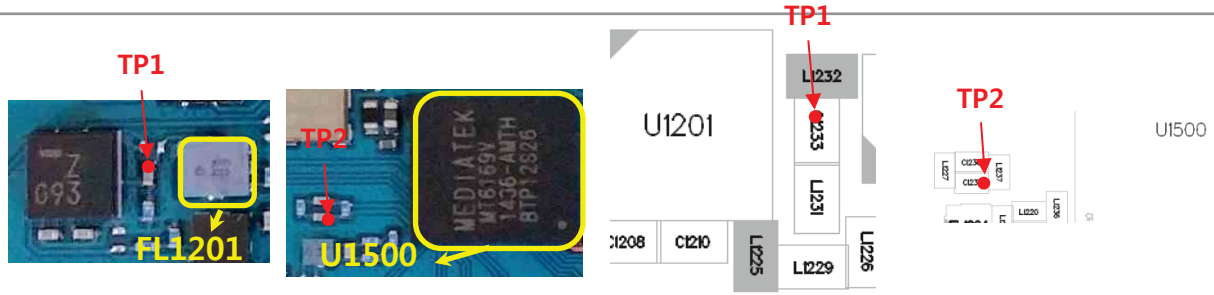

Circuit Diagram

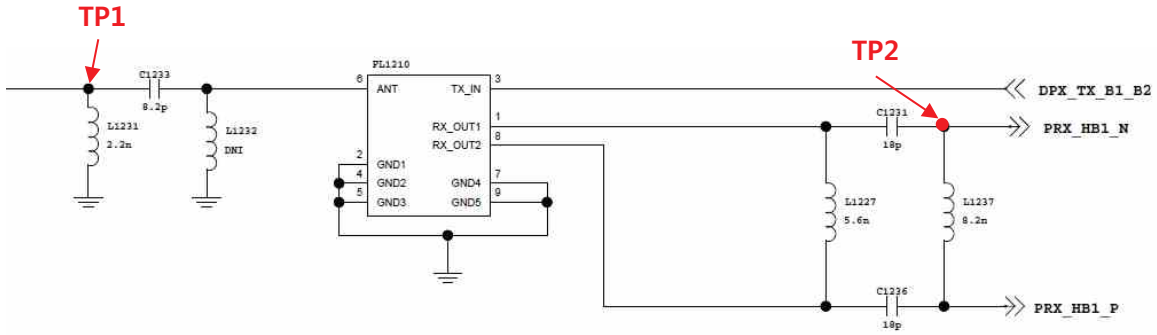

Copyright © 2015 LG Electronics. Inc. All right reserved. Only training and service purposes

3.6 WCDMA RF PART

3.6.4 Checking RF Signal RX path(SW, WCDMA B5/8)

Checking Flow

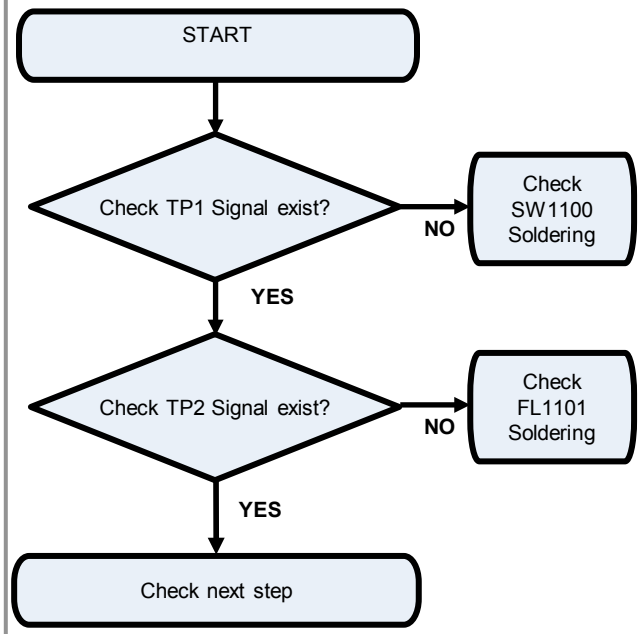

Image

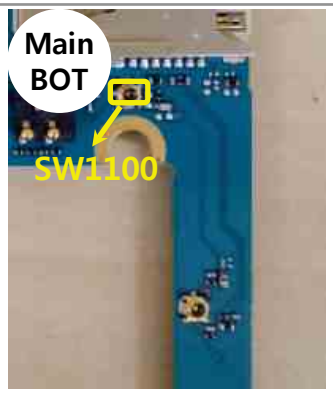

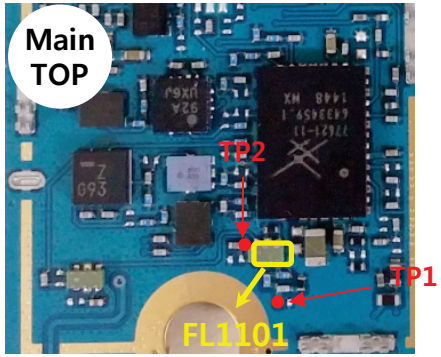

Circuit Diagram

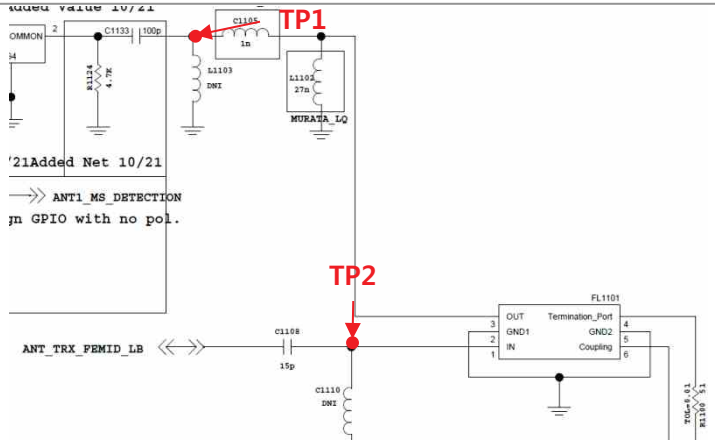

Copyright © 2015 LG Electronics. Inc. All right reserved. Only training and service purposes

3.6 WCDMA RF PART

3.6.5 Checking RF Signal RX path(WCDMA B5/8)

Checking Flow

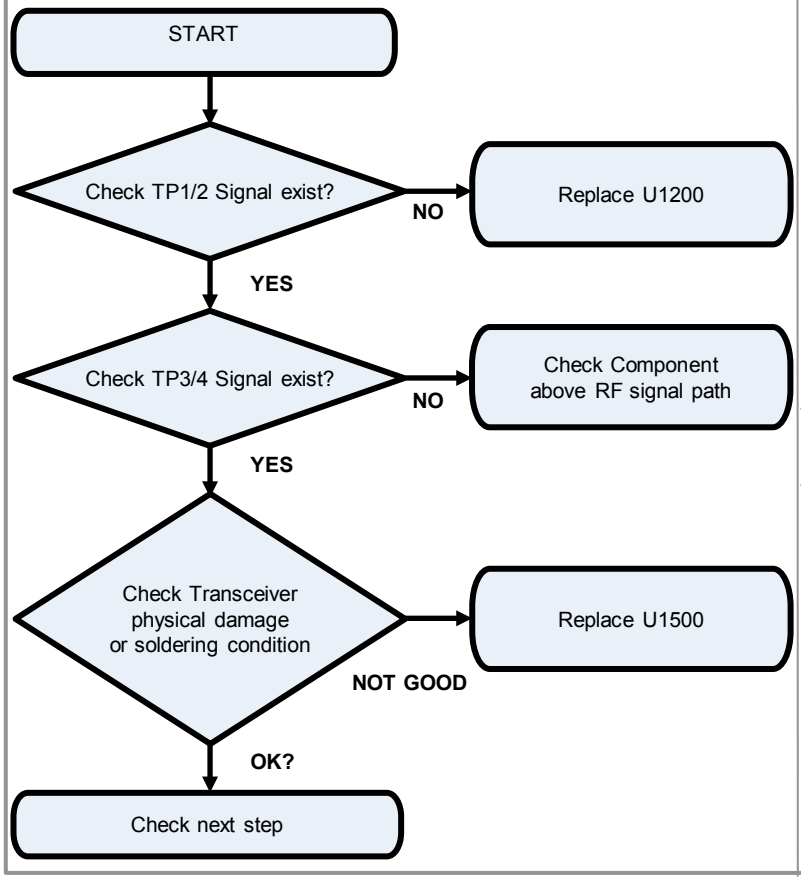

Image

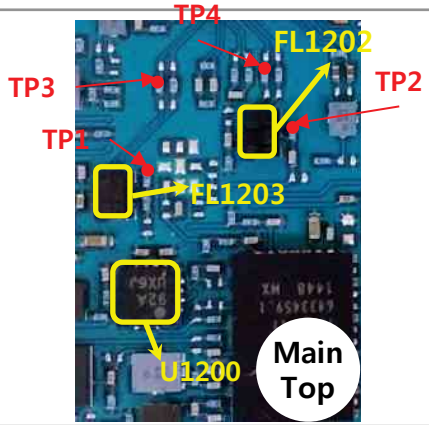

Circuit Diagram

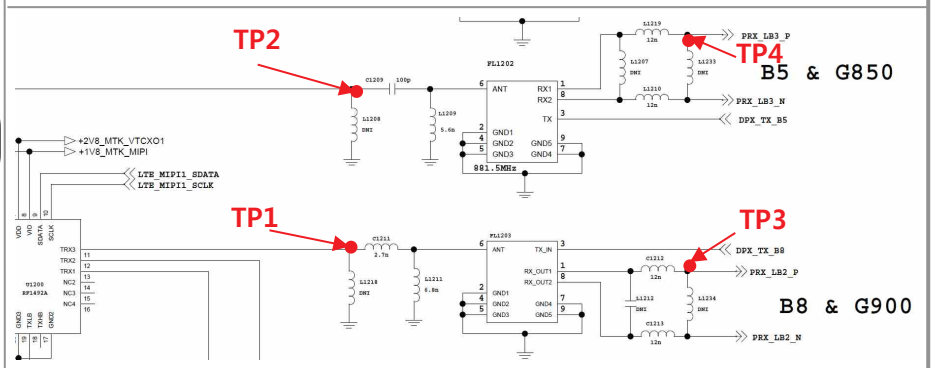

Copyright © 2015 LG Electronics. Inc. All right reserved. Only training and service purposes

3.6 WCDMA RF PART

3.6.6 WCDMA RF Part TX RF PATH

Image

1. WCDMA B1 TX PATH
2. WCDMA B5 TX PATH
3. WCDMA B8 TX PATH

1. GSM850/900 TX PATH
2. GSM1800/1900 TX PATH

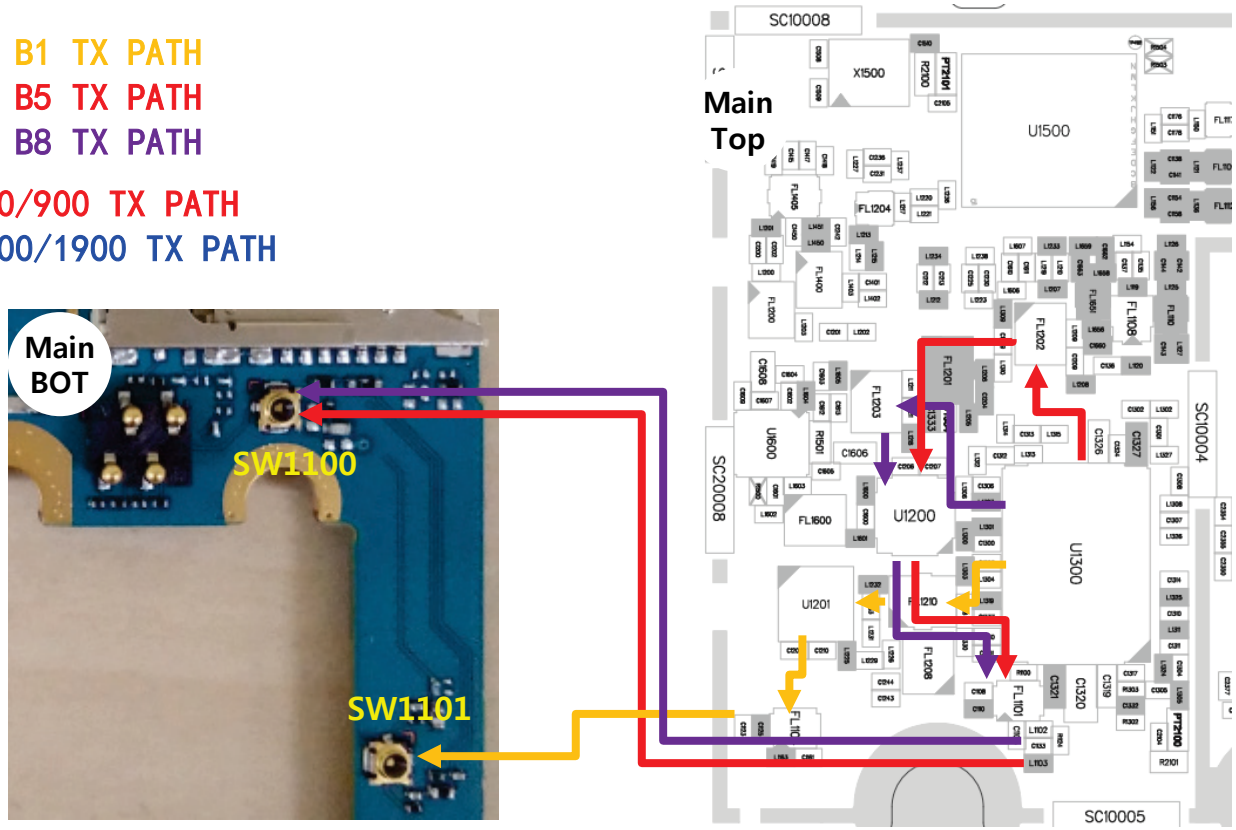

Copyright © 2015 LG Electronics. Inc. All right reserved. Only training and service purposes

3.6 WCDMA RF PART

3.6.7 Checking WCDMA PAM DC Power Circuit

Checking Flow

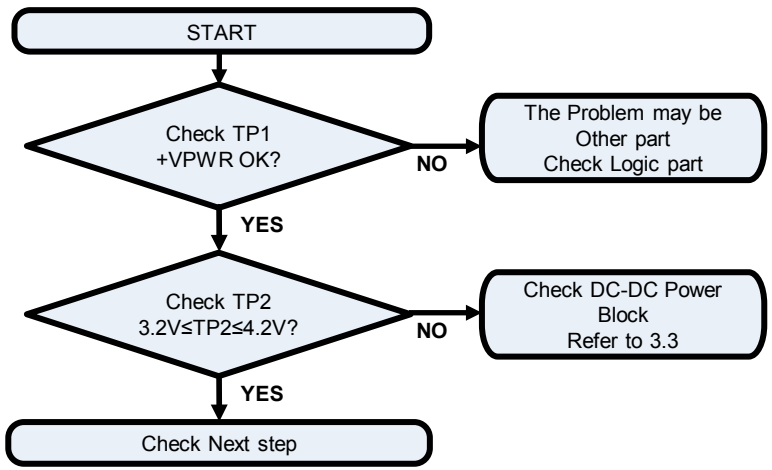

Image

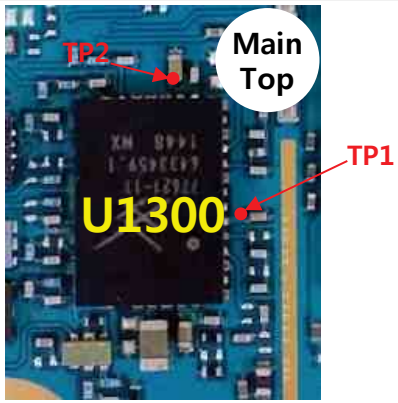

Circuit Diagram

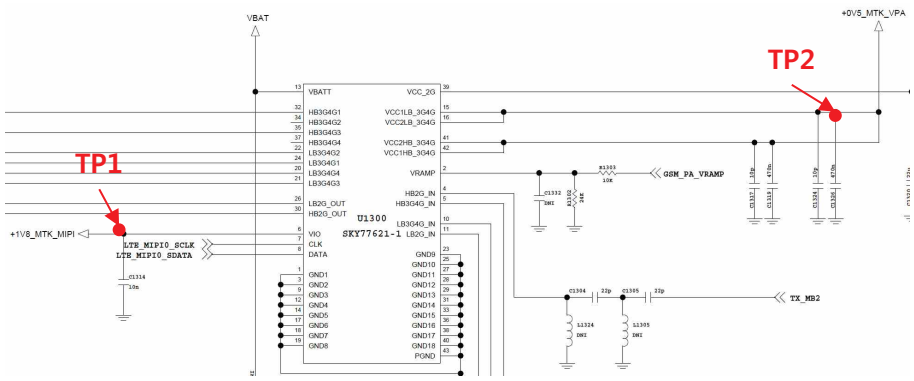

Copyright © 2015 LG Electronics. Inc. All right reserved. Only training and service purposes

3.6 WCDMA RF PART

3.6.8 Checking RF Signal TX path(SW, WCDMA B1)

Checking Flow

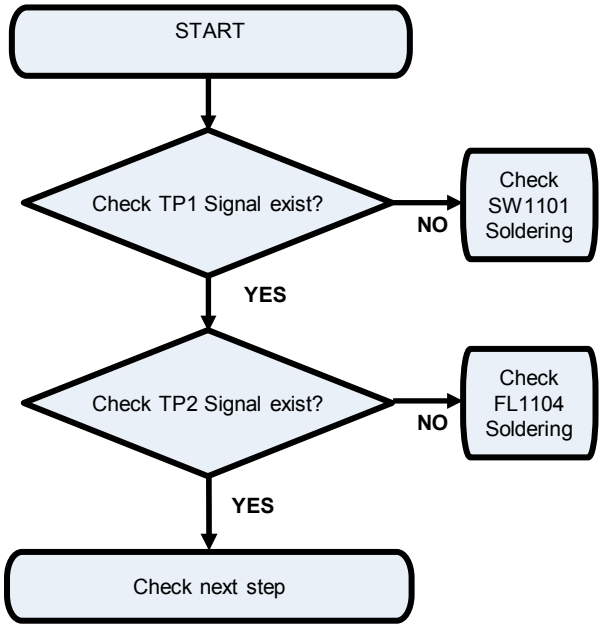

Image

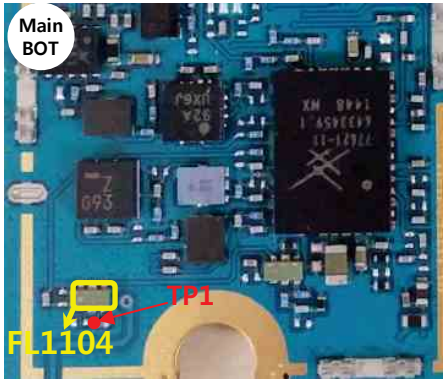

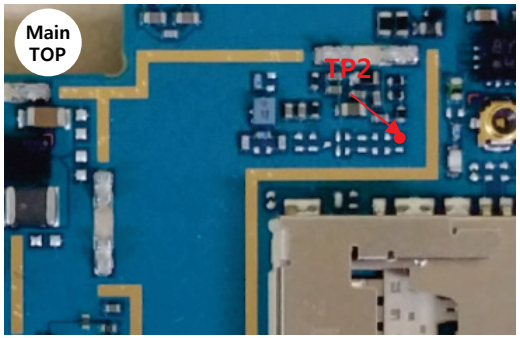

Circuit Diagram

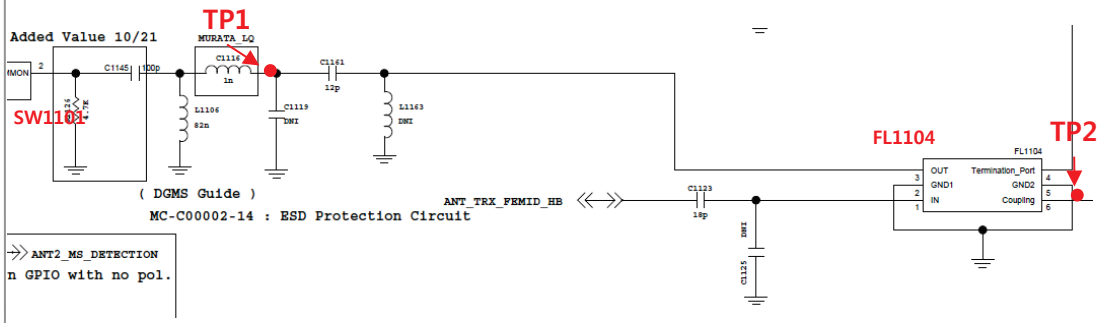

Copyright © 2015 LG Electronics. Inc. All right reserved. Only training and service purposes

3.6 WCDMA RF PART

3.6.9 Checking RF Signal TX path(WCDMA B1)

Checking Flow

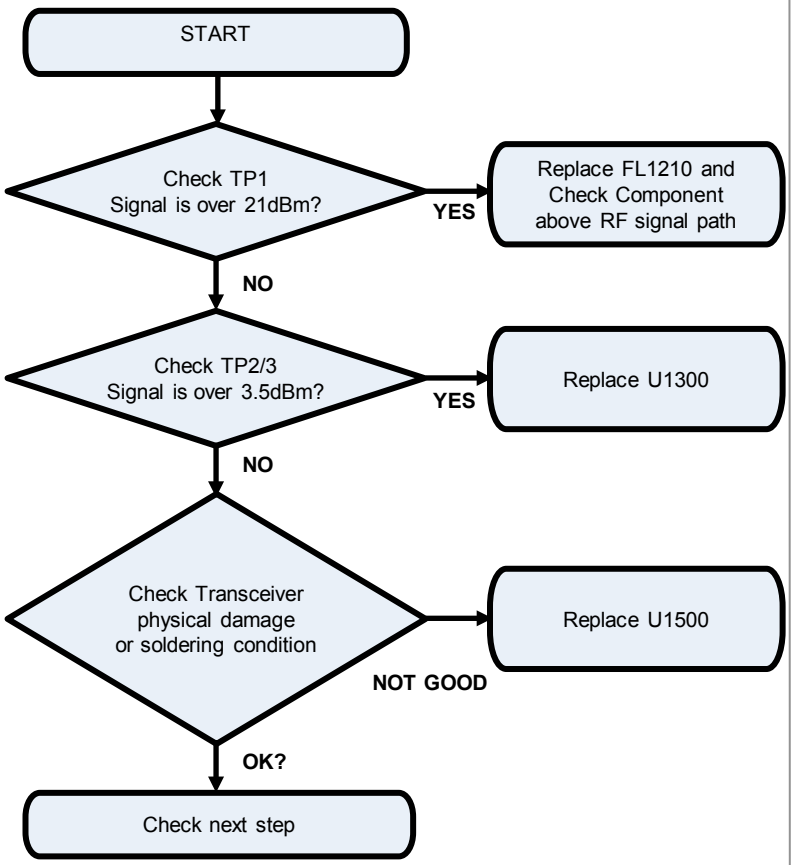

Image

Main
Top

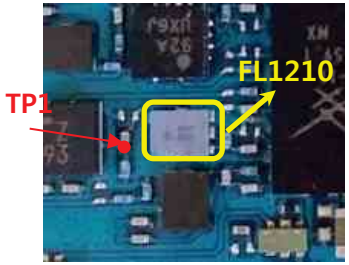

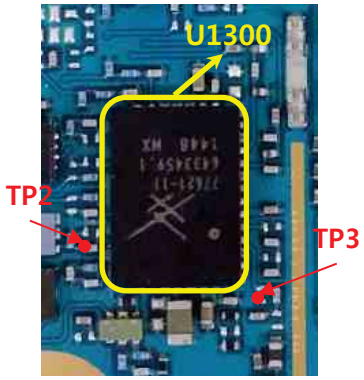

Copyright © 2015 LG Electronics. Inc. All right reserved. Only training and service purposes

3.6 WCDMA RF PART

3.6.9 Checking RF Signal TX path(WCDMA B1)

Circuit Diagram

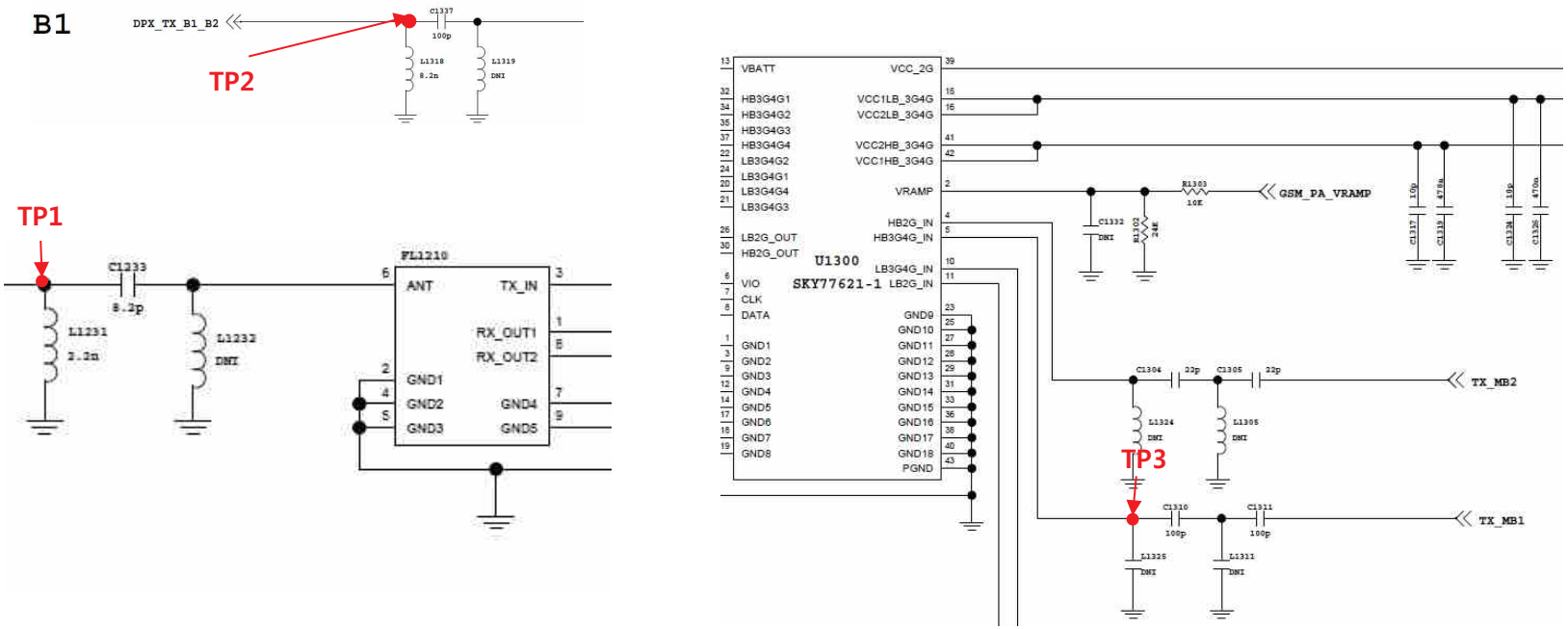

Copyright © 2015 LG Electronics. Inc. All right reserved. Only training and service purposes

3.6 WCDMA RF PART

3.6.10 Checking RF Signal TX path(SW, WCDMA B5/8)

Checking Flow

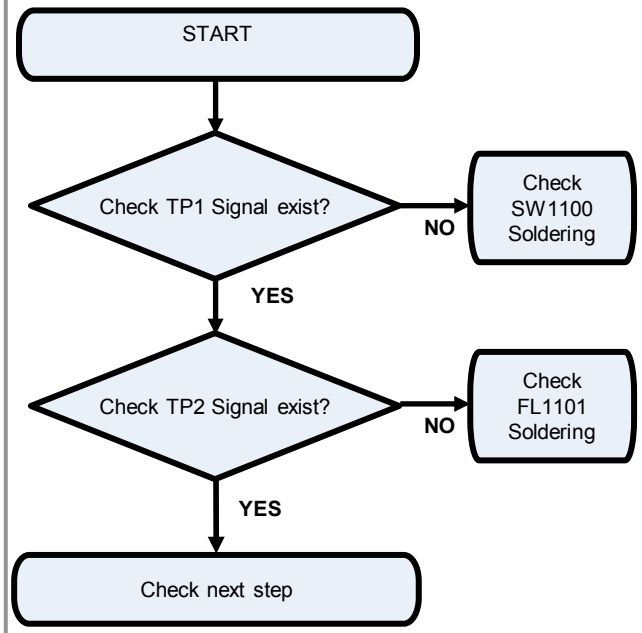

Image

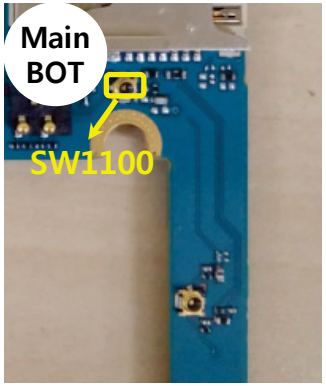

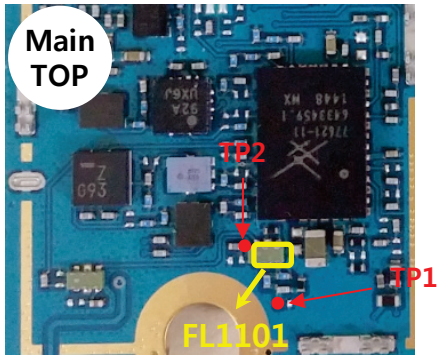

Circuit Diagram

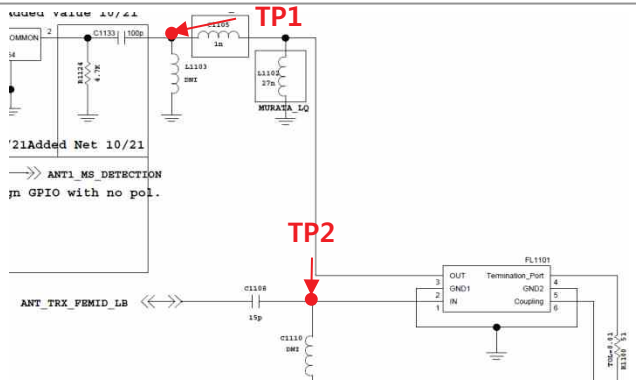

Copyright © 2015 LG Electronics. Inc. All right reserved. Only training and service purposes

3.6 WCDMA RF PART

3.6.11 Checking RF Signal TX path(WCDMA B5/8)

Checking Flow

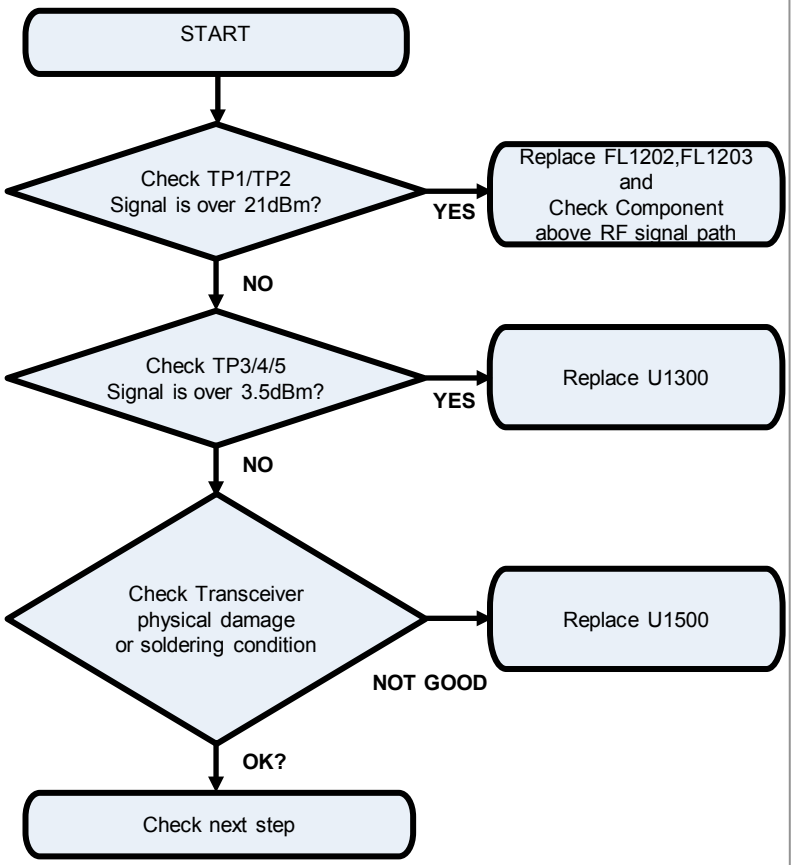

Image

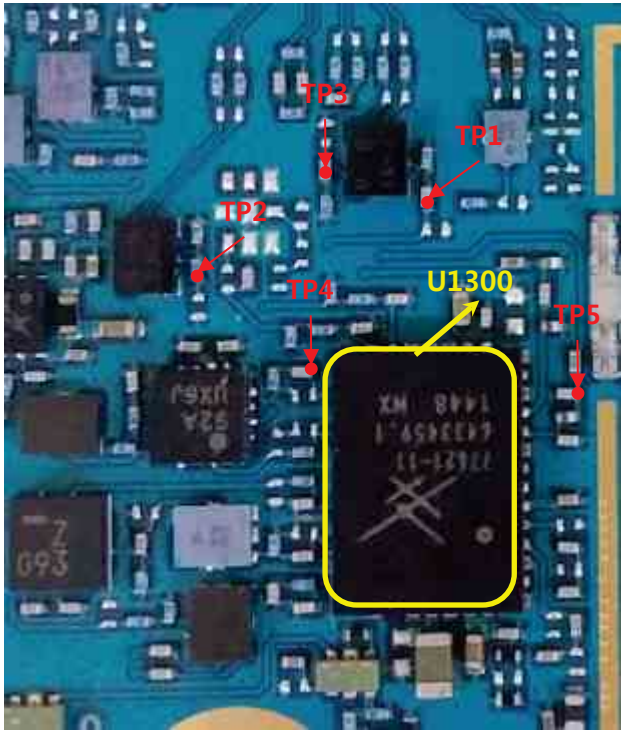

Copyright © 2015 LG Electronics. Inc. All right reserved. Only training and service purposes

3.6 WCDMA RF PART

3.6.11 Checking RF Signal TX path(WCDMA B5/8)

Circuit Diagram

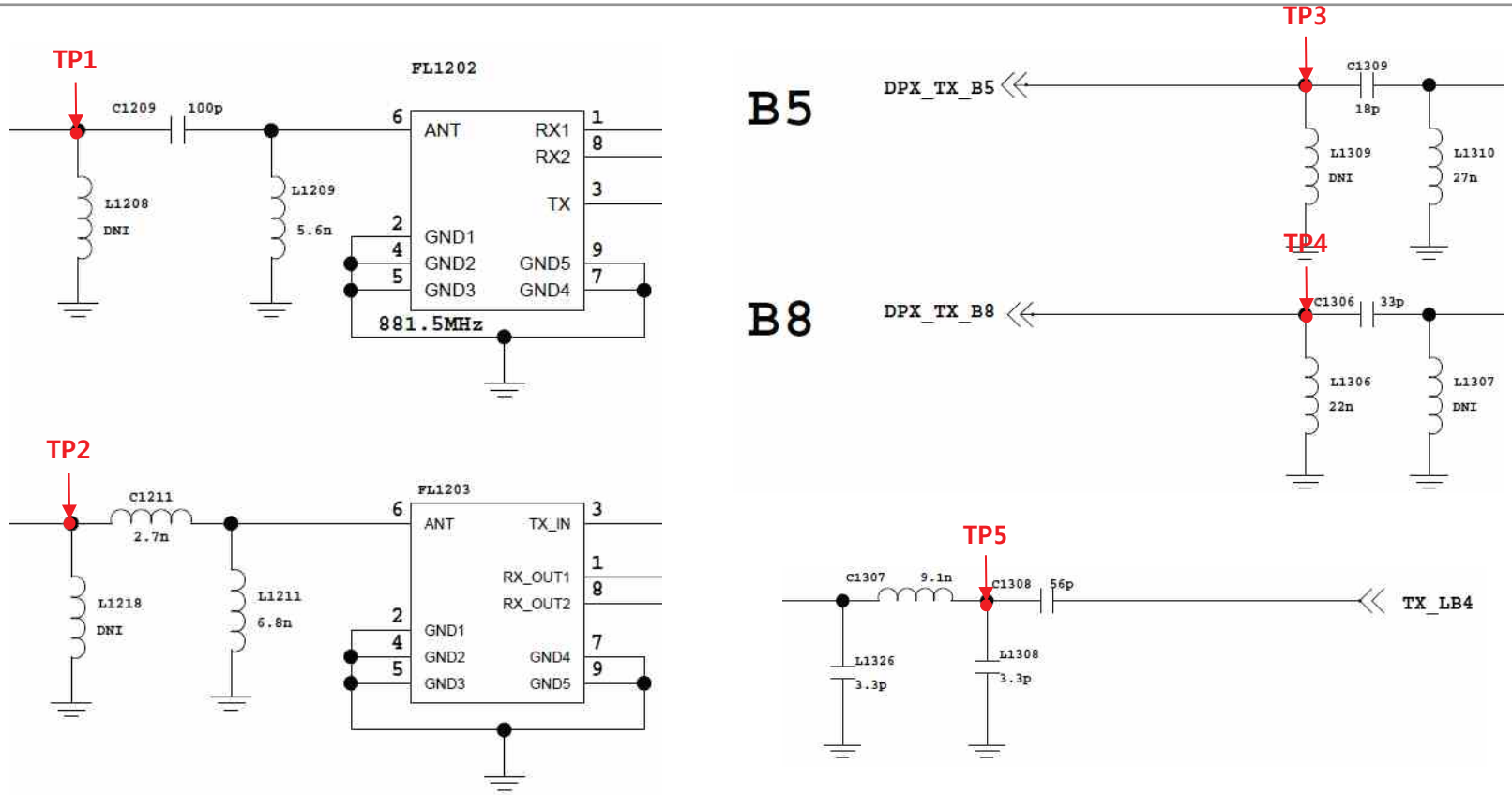

Copyright © 2015 LG Electronics. Inc. All right reserved. Only training and service purposes

3.7 LTE RF PART

LTE RF Part support LTE B3/7/28 with ASM, PAM, Transceiver component

Checking Flow

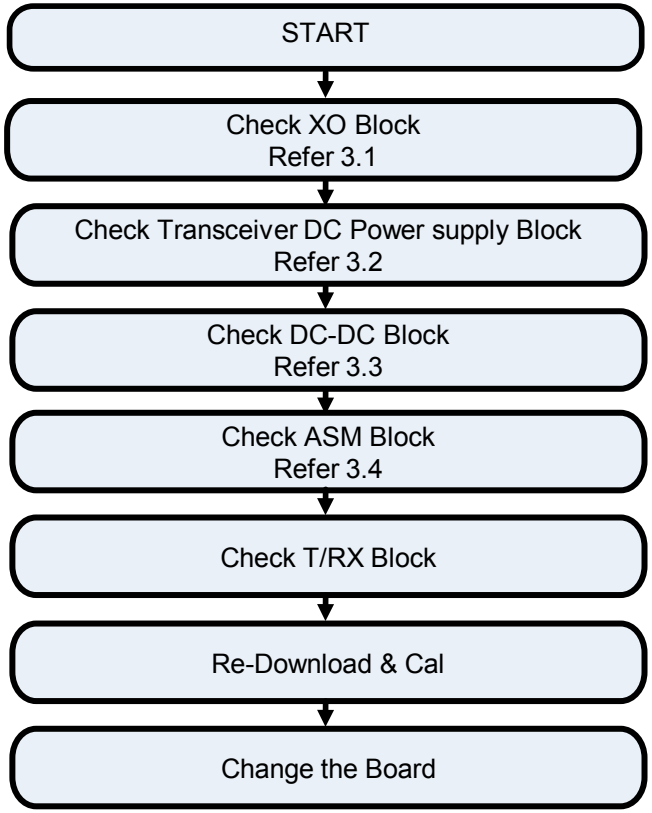

Copyright © 2015 LG Electronics. Inc. All right reserved. Only training and service purposes

3.7 LTE RF PART

3.7.1 LTE RF Part RX RF PATH

Image

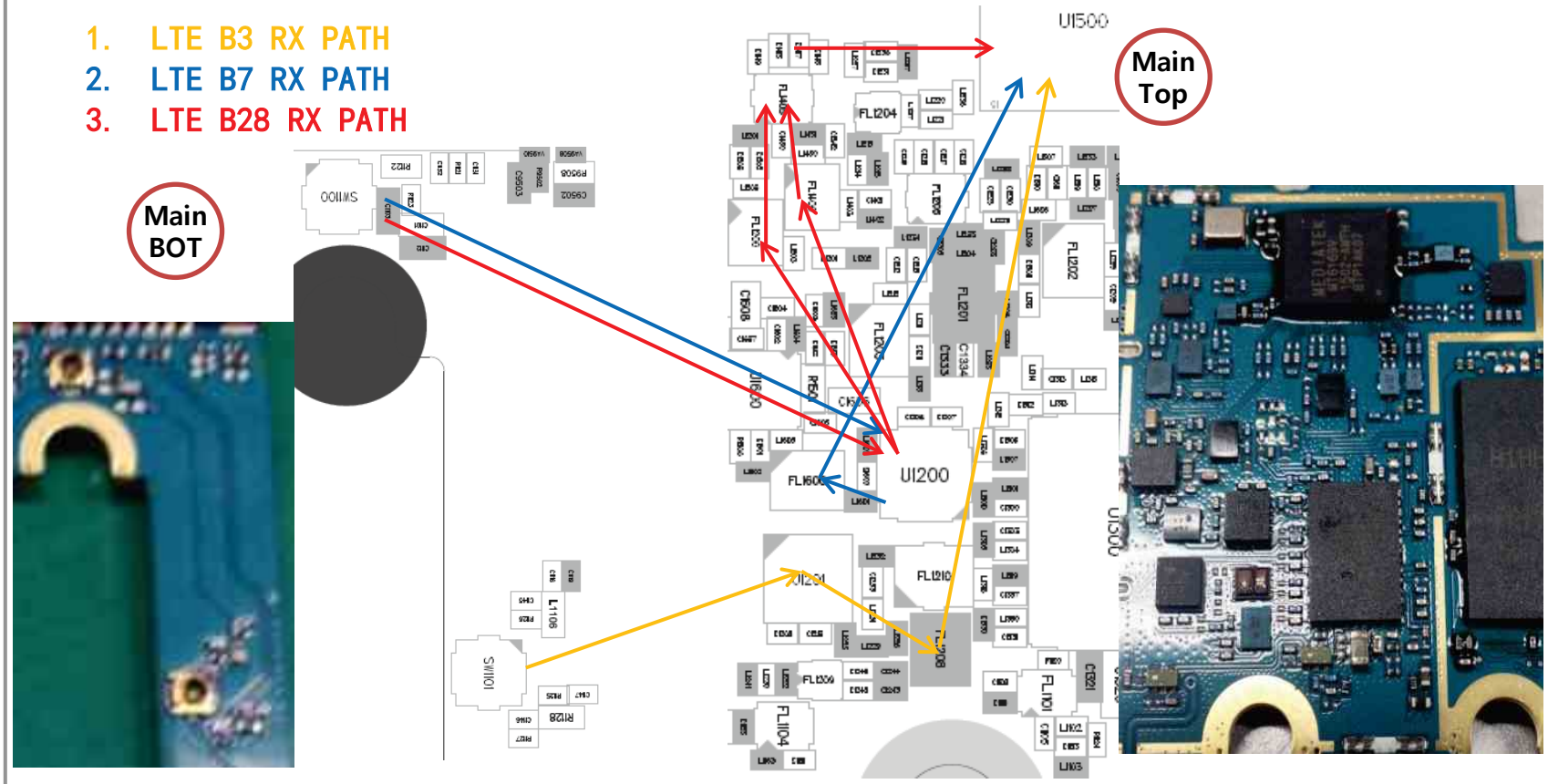

Copyright © 2015 LG Electronics. Inc. All right reserved. Only training and service purposes

3.7 LTE RF PART

3.7.2 Checking RF Signal RX path(SW, LTE B3)

Checking Flow

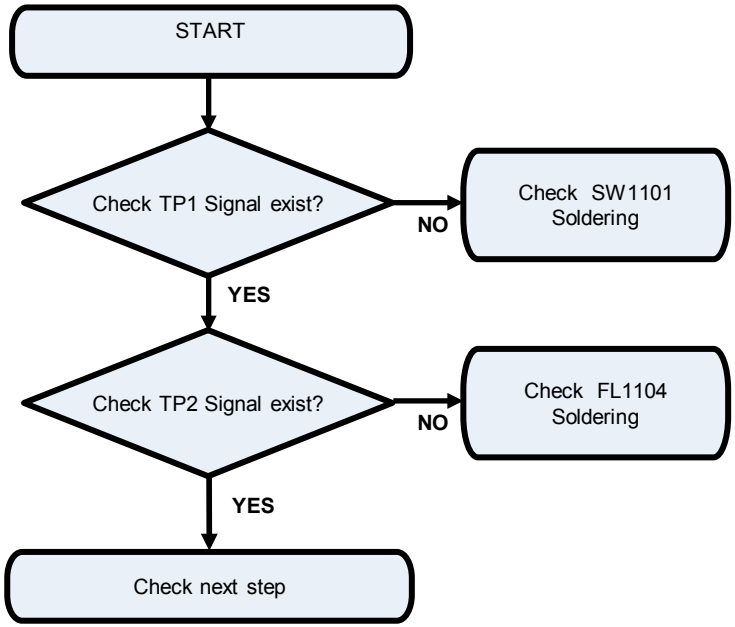

Image

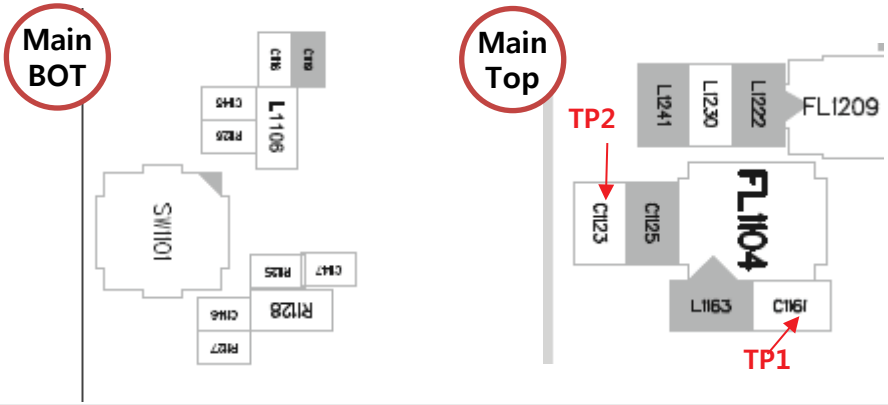

Circuit Diagram

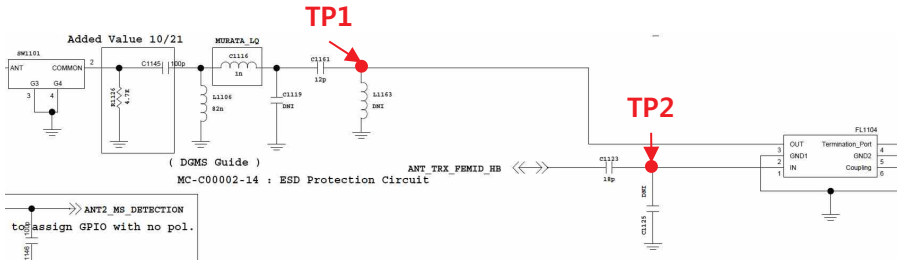

Copyright © 2015 LG Electronics. Inc. All right reserved. Only training and service purposes

3.7 LTE RF PART

3.7.3 Checking RF Signal RX path(LTE B3)

Checking Flow

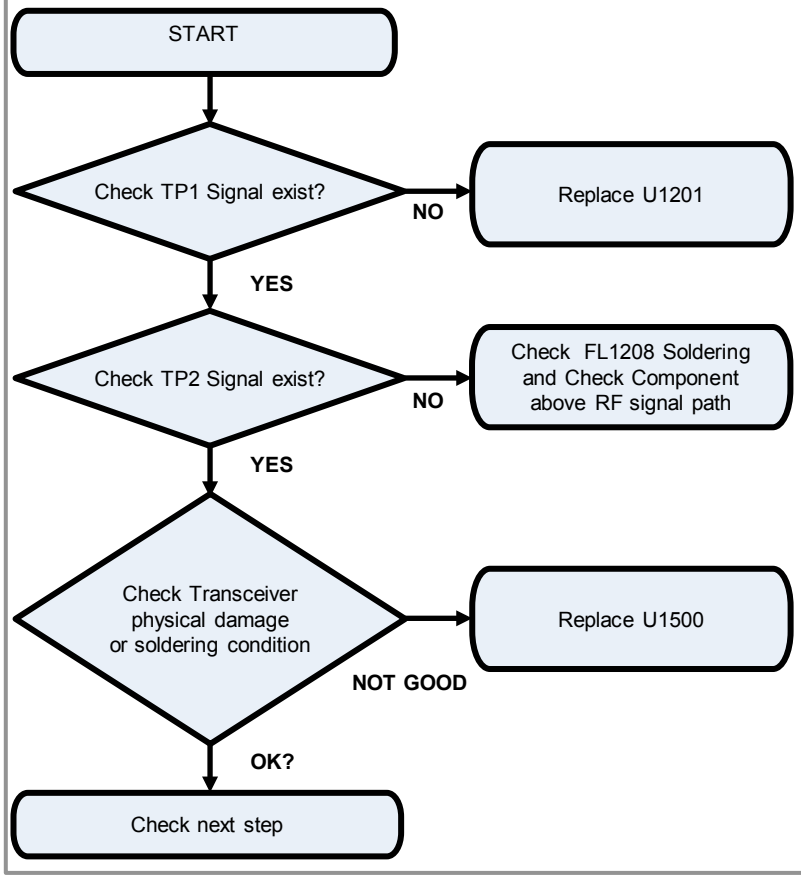

Image

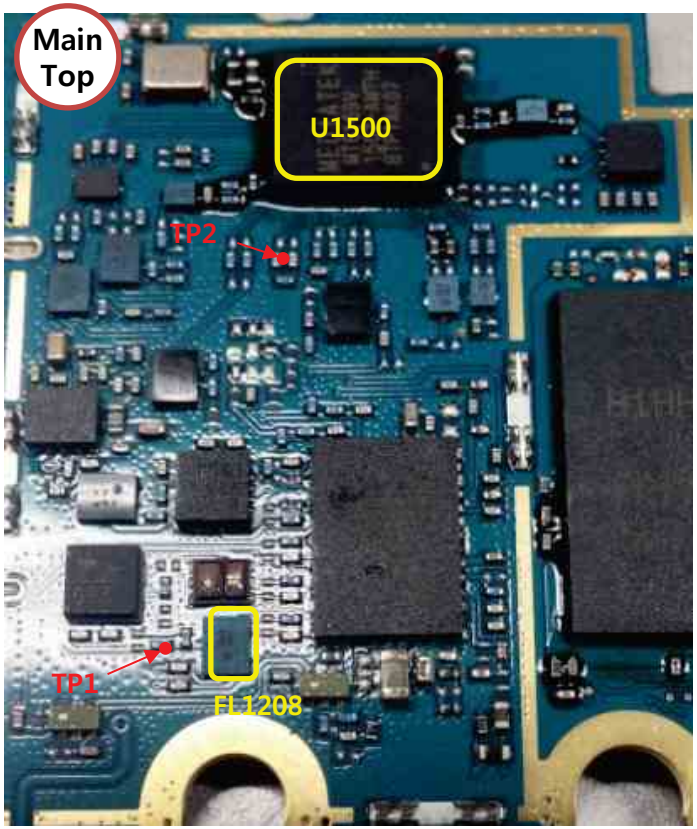

Copyright © 2015 LG Electronics. Inc. All right reserved. Only training and service purposes

3.7 LTE RF PART

3.7.3 Checking RF Signal RX path(LTE B3)

Circuit Diagram

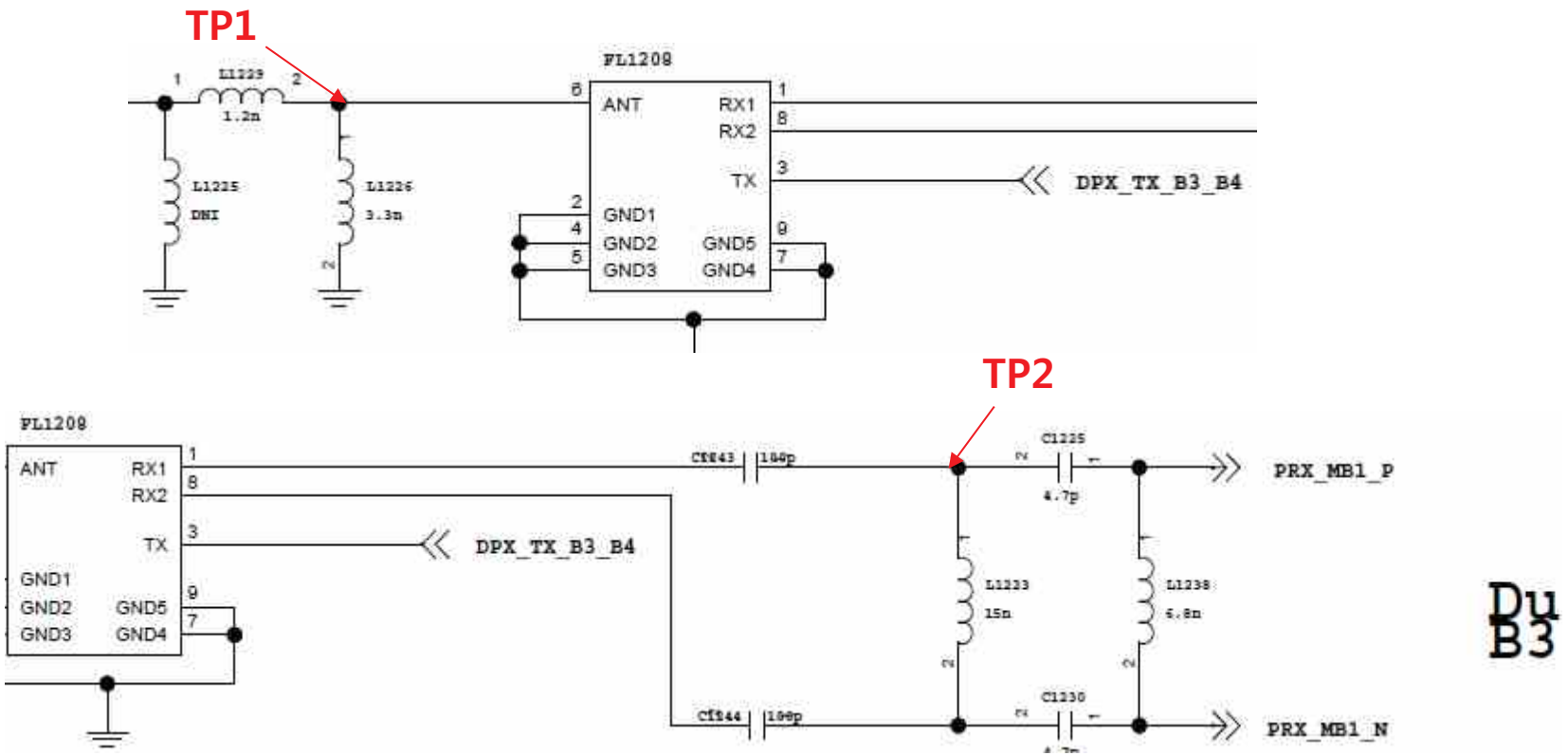

Copyright © 2015 LG Electronics. Inc. All right reserved. Only training and service purposes

3.7 LTE RF PART

3.7.4 Checking RF Signal RX path(SW, LTEB7/28)

Checking Flow

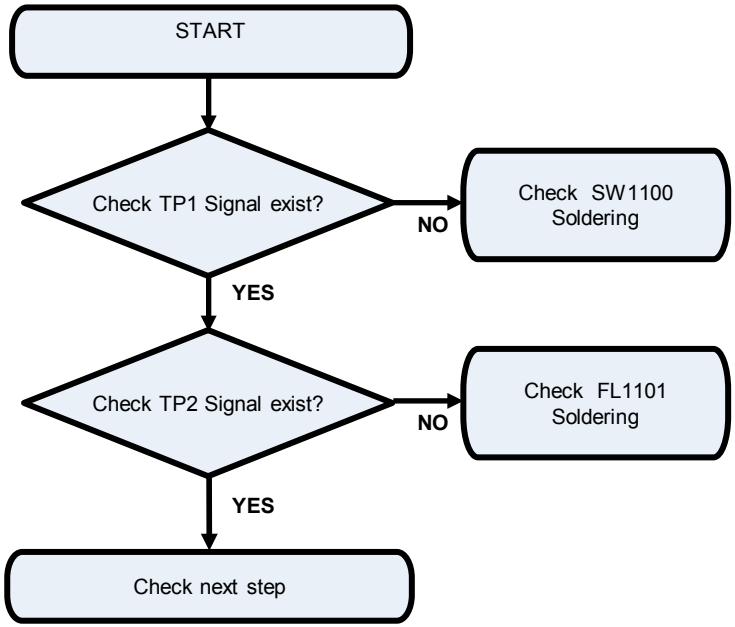

Image

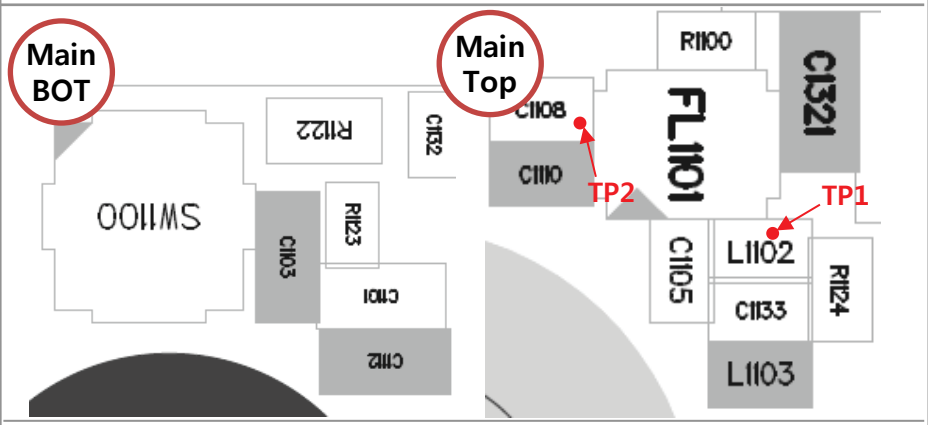

Circuit Diagram

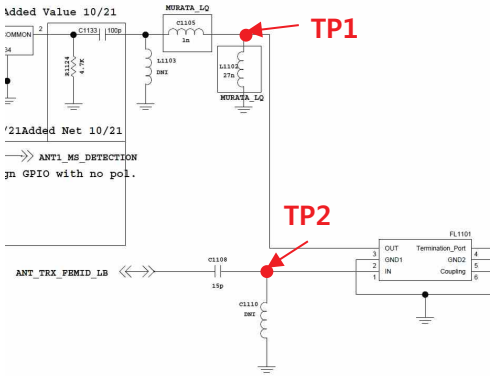

Copyright © 2015 LG Electronics. Inc. All right reserved. Only training and service purposes

3.7 LTE RF PART

3.7.5 Checking RF Signal RX path(LTE B7)

Checking Flow

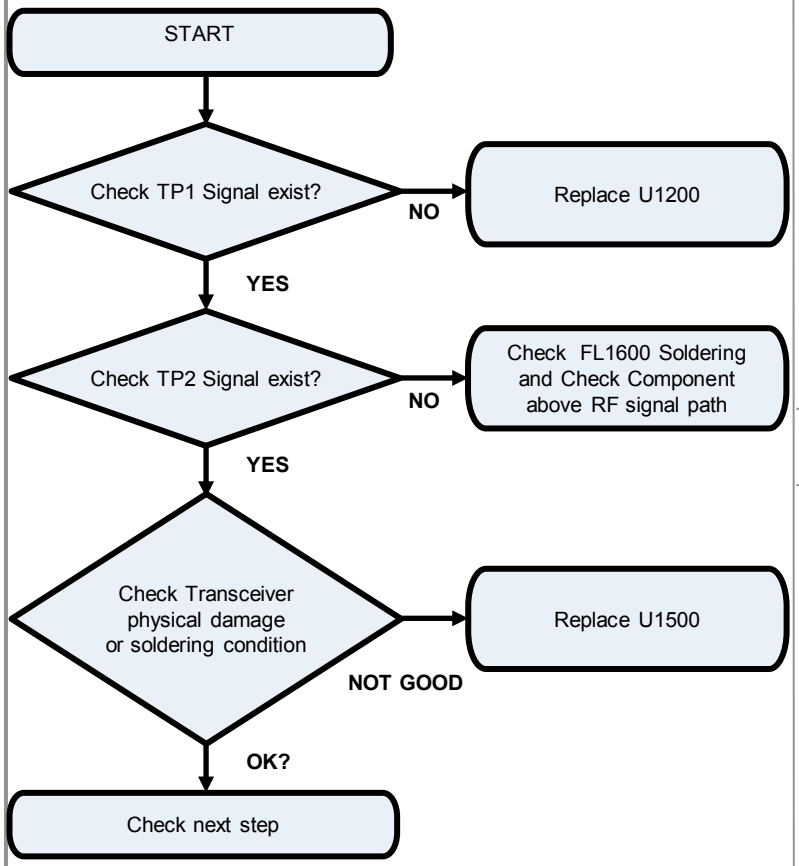

Image

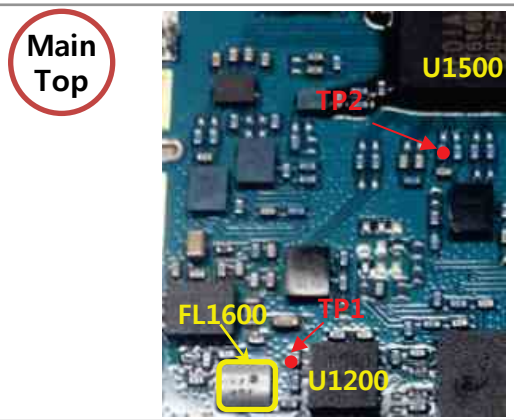

Circuit Diagram

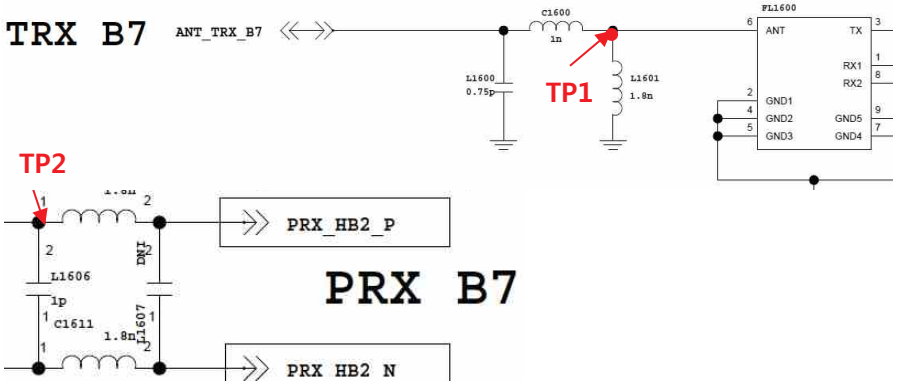

Copyright © 2015 LG Electronics. Inc. All right reserved. Only training and service purposes

3.7 LTE RF PART

3.7.6 Checking RF Signal RX path(LTE B28)

Checking Flow	Image
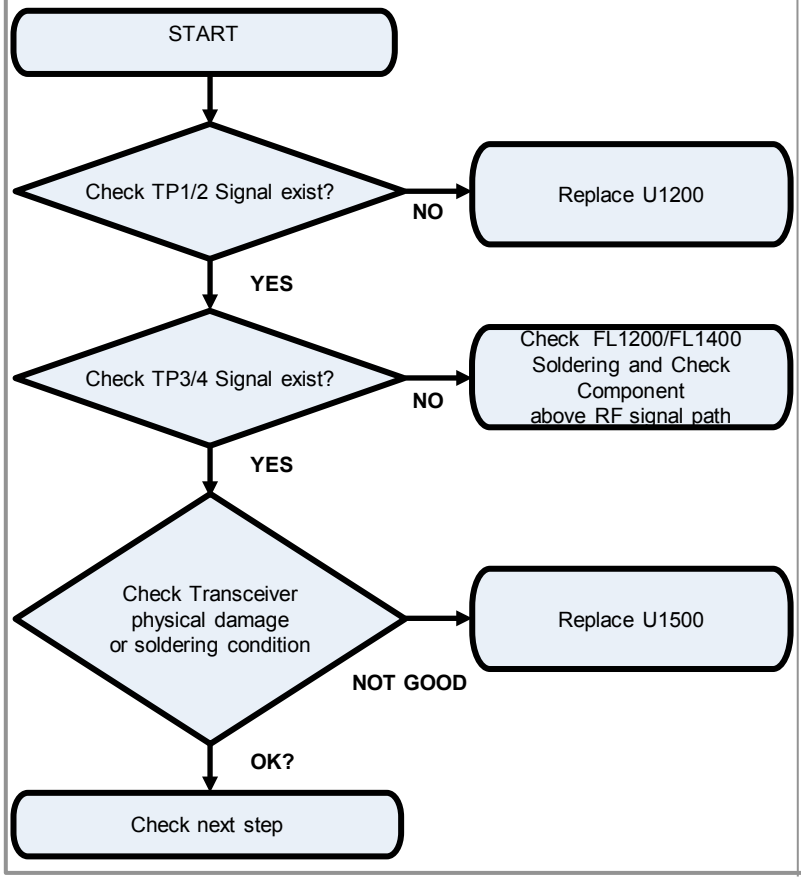	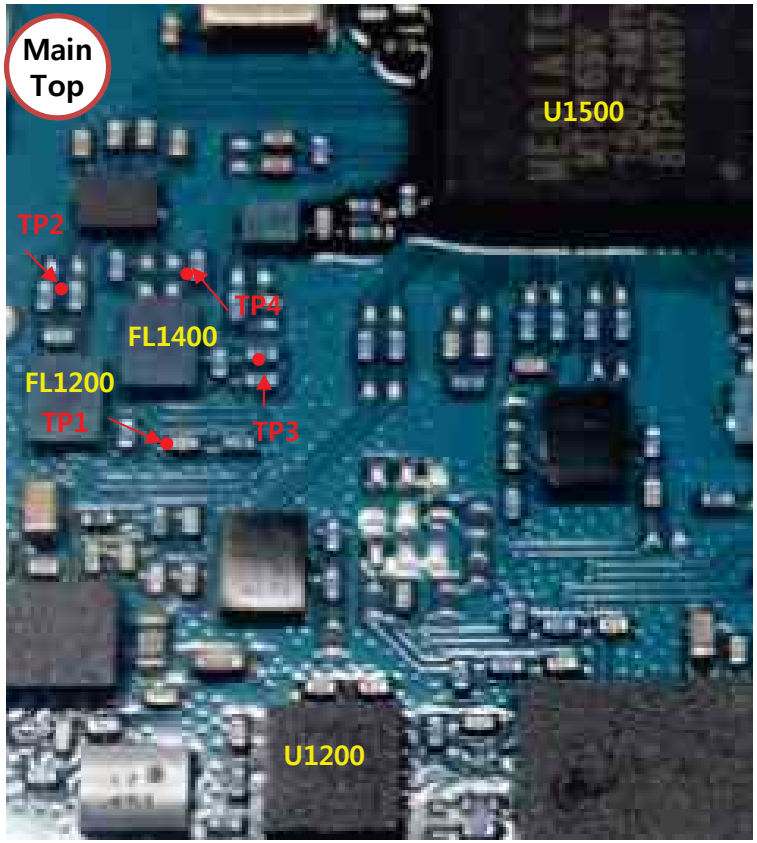

Copyright © 2015 LG Electronics. Inc. All right reserved. Only training and service purposes

3.7 LTE RF PART

3.7.6 Checking RF Signal RX path(LTE B8/20)

Circuit Diagram

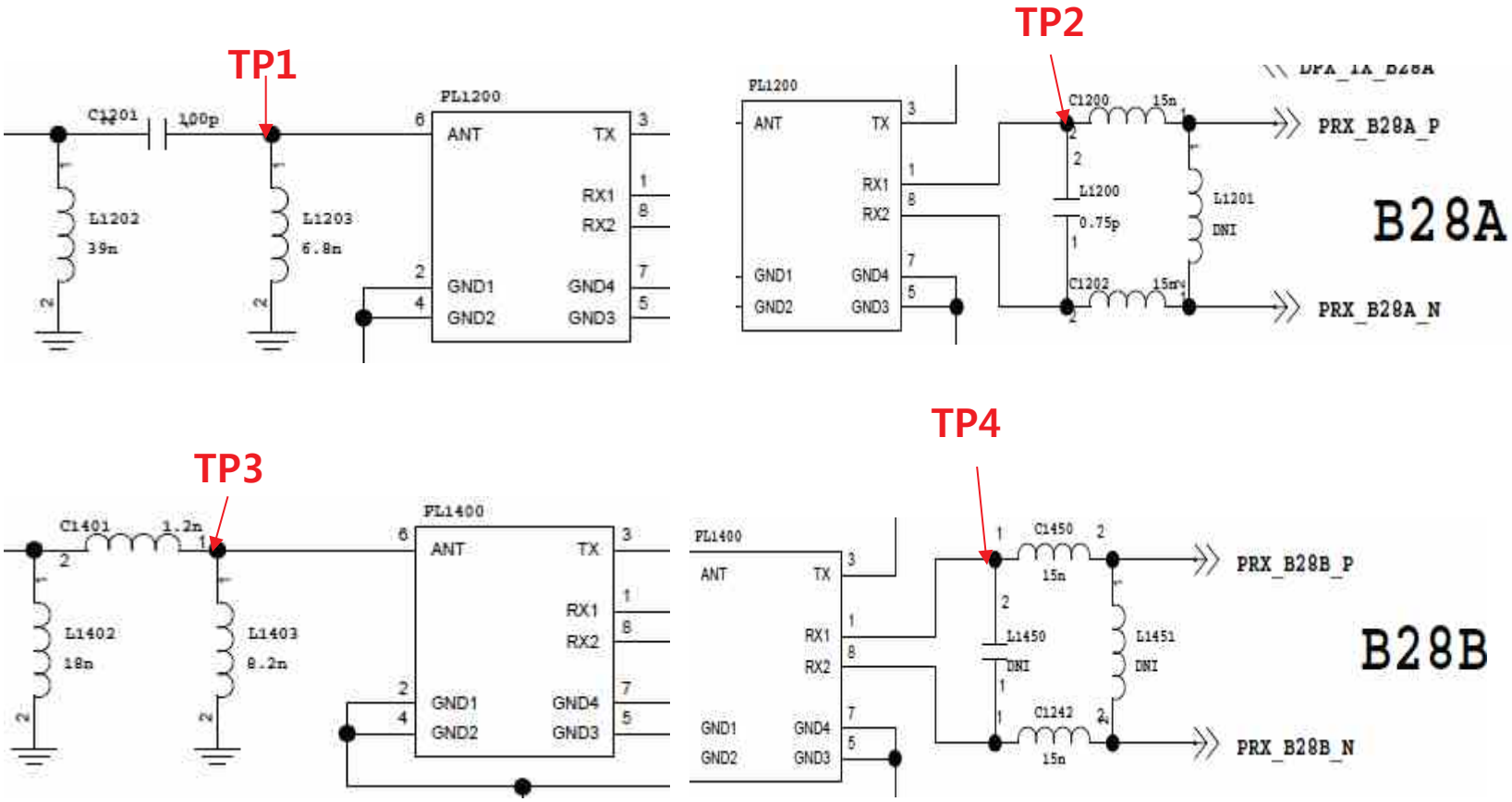

Copyright © 2015 LG Electronics. Inc. All right reserved. Only training and service purposes

3.7 LTE RF PART

3.7.7 LTE RF Part DRX RF PATH

Image

1. LTE B3 DRX PATH
2. LTE B7 DRX PATH
3. LTE B28 DRX PATH
4. LTE B3/28 DRX COMMON PATH

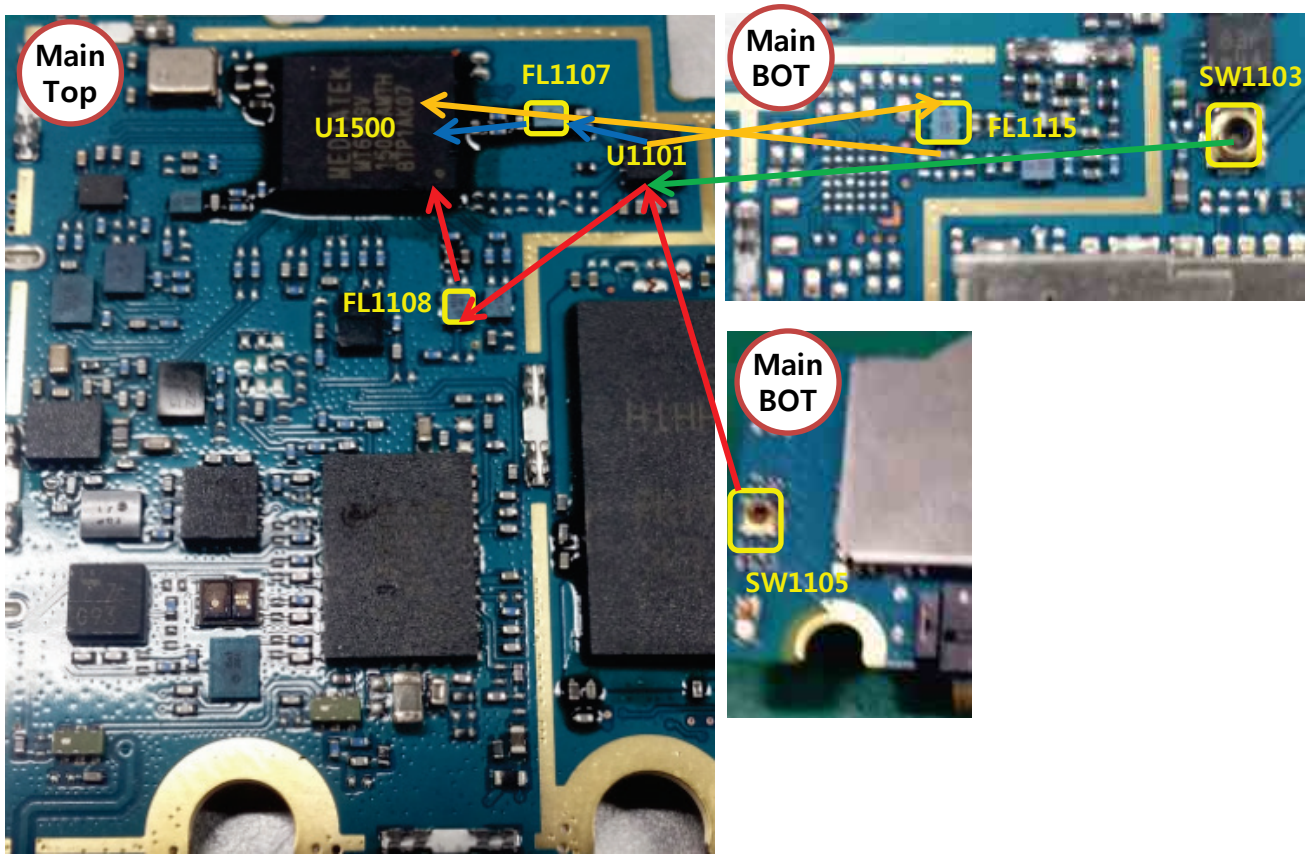

Copyright © 2015 LG Electronics. Inc. All right reserved. Only training and service purposes

3.7 LTE RF PART

3.7.8 Checking RF Signal DRX path(LTEB3/B7/B28)

Checking Flow

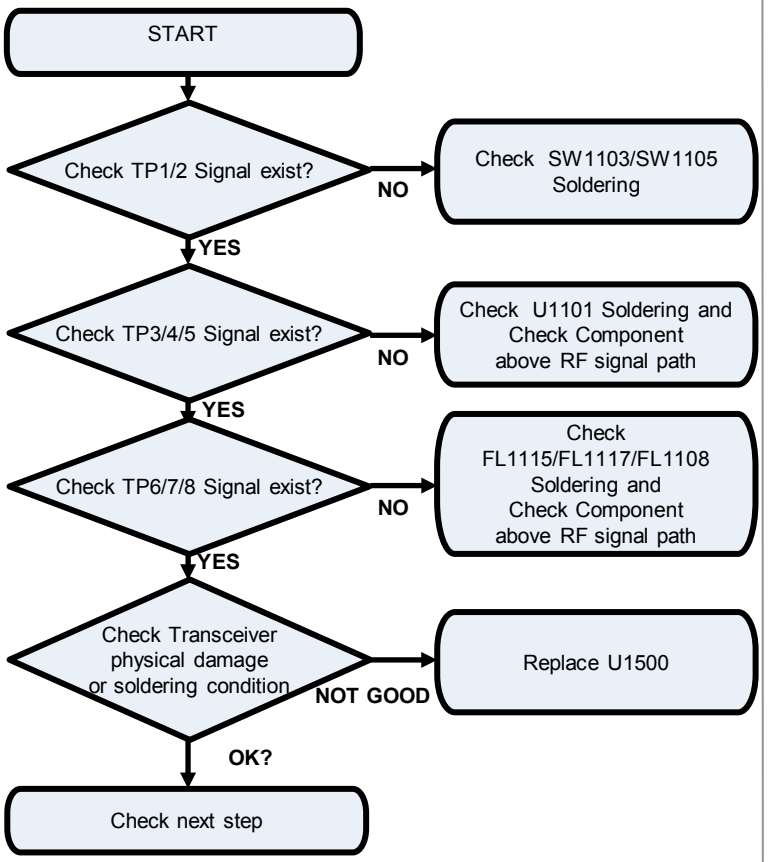

Image

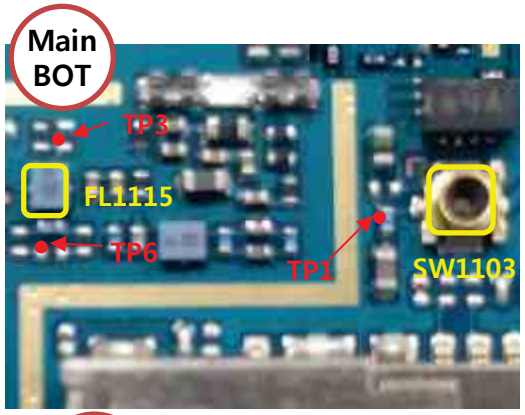

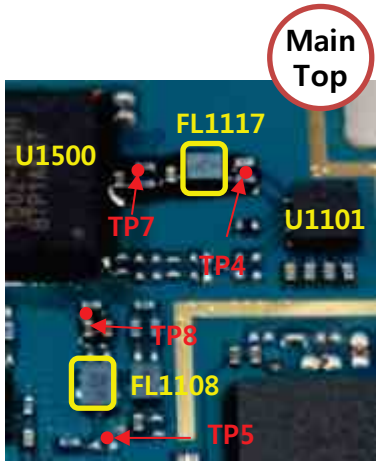

Copyright © 2015 LG Electronics. Inc. All right reserved. Only training and service purposes

3.7 LTE RF PART

3.7.8 Checking RF Signal DRX path(LTEB3/B7/B28)

Circuit Diagram

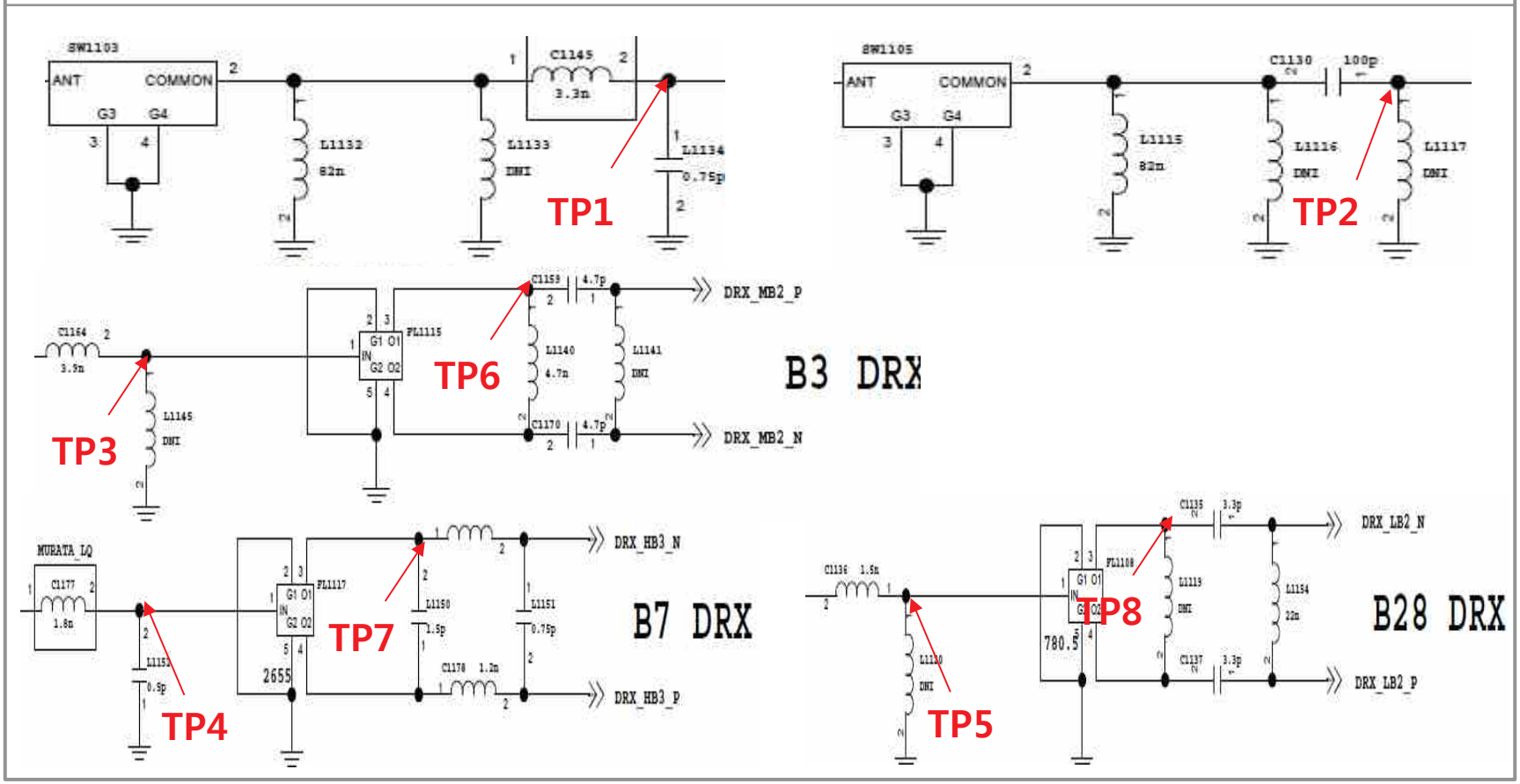

Copyright © 2015 LG Electronics. Inc. All right reserved. Only training and service purposes

3.7 LTE RF PART

3.7.10 LTE RF Part TX RF PATH

Image

1. LTE B3 TX PATH
2. LTE B7 TX PATH
3. LTE B28 TX PATH

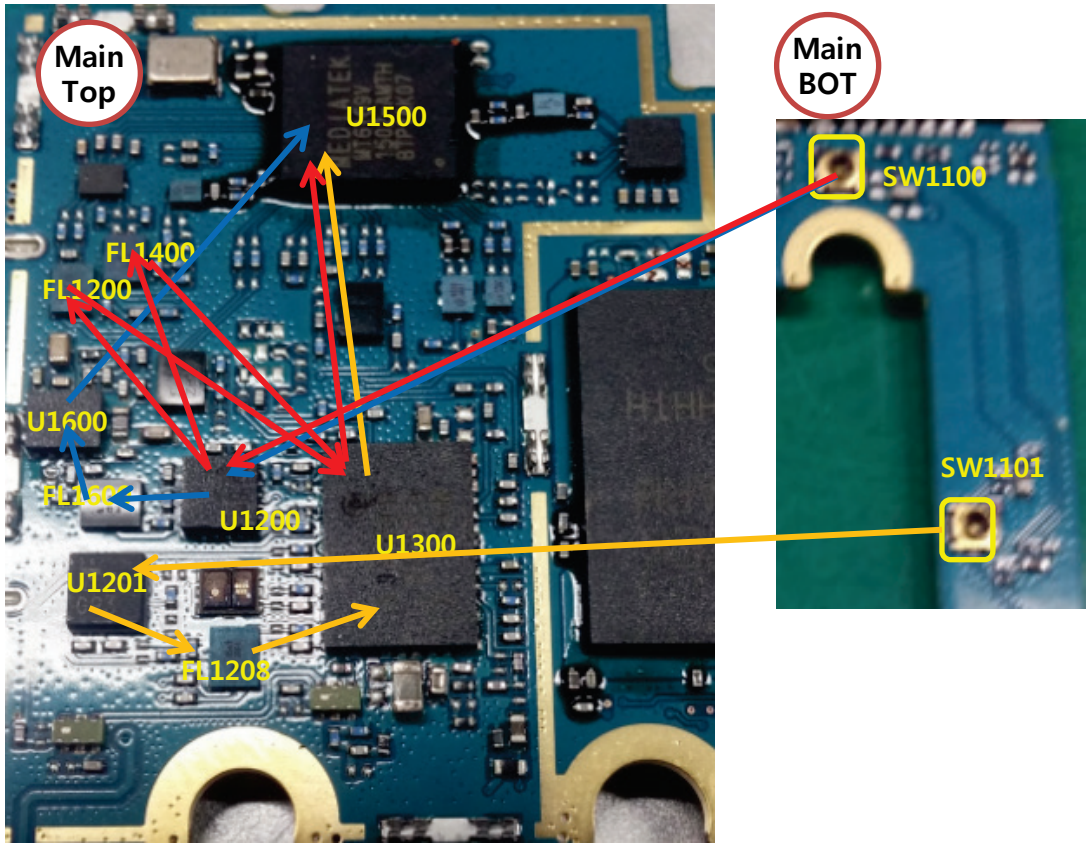

Copyright © 2015 LG Electronics. Inc. All right reserved. Only training and service purposes

3.7 LTE RF PART

3.7.11 Checking LTE PAM DC Power Circuit(B3/28)

Checking Flow

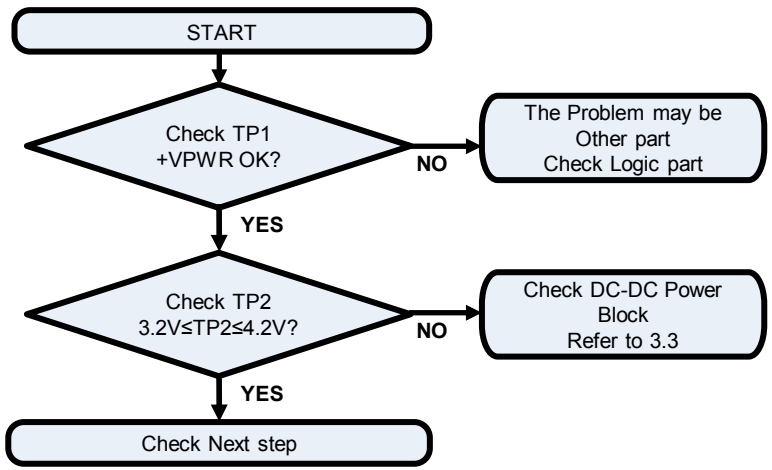

Image

Circuit Diagram

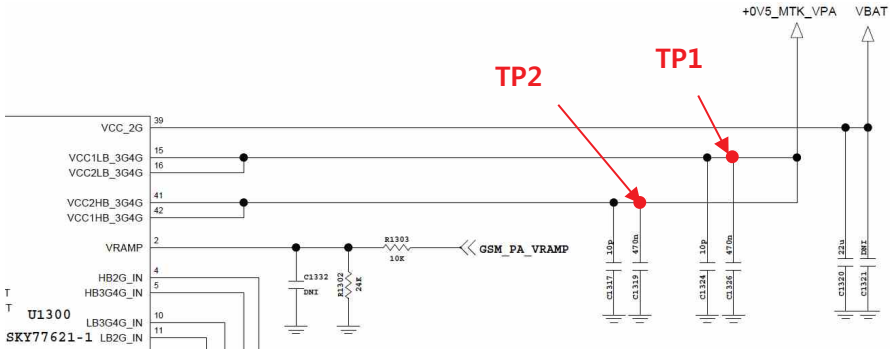

Copyright © 2015 LG Electronics. Inc. All right reserved. Only training and service purposes

3.7 LTE RF PART

3.7.12 Checking LTE PAM DC Power Circuit(B7)

Checking Flow

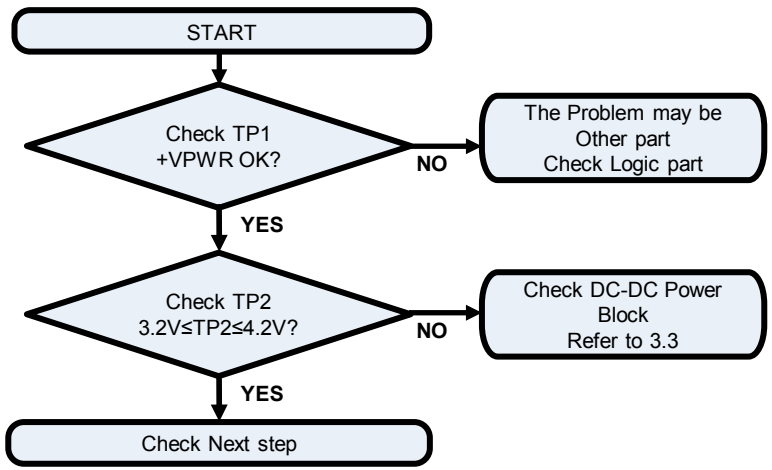

Image

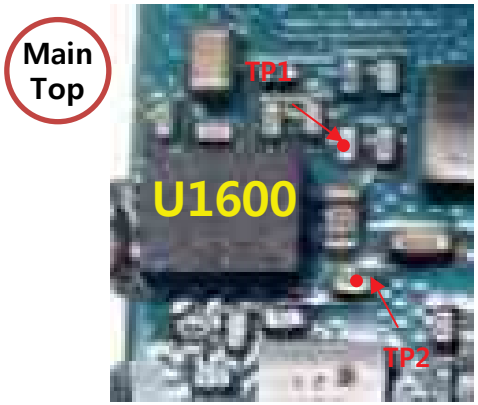

Circuit Diagram

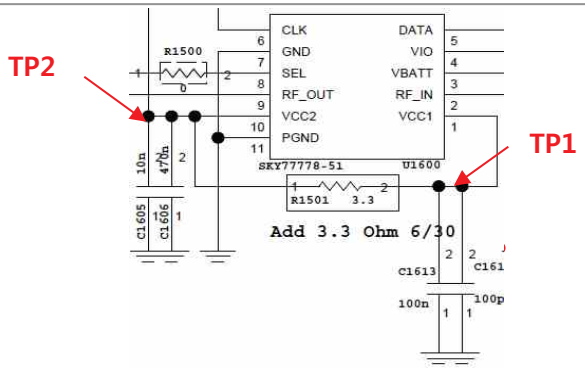

Copyright © 2015 LG Electronics. Inc. All right reserved. Only training and service purposes

3.7 LTE RF PART

3.7.13 Checking RF Signal TX path(SW, LTE B3)

Checking Flow

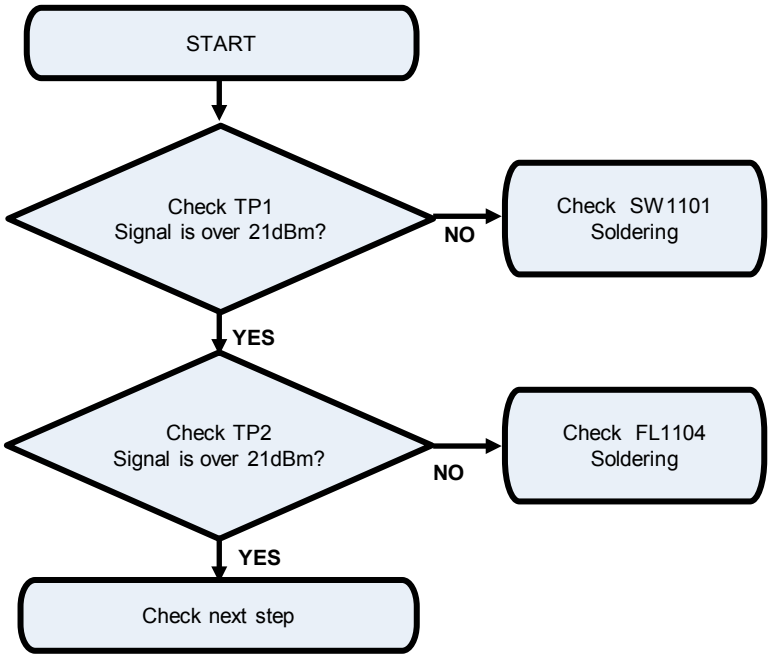

Image

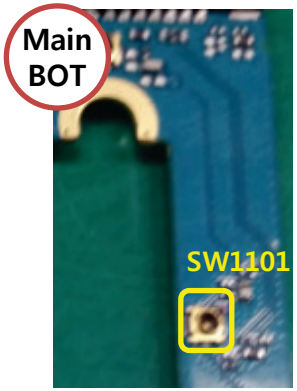

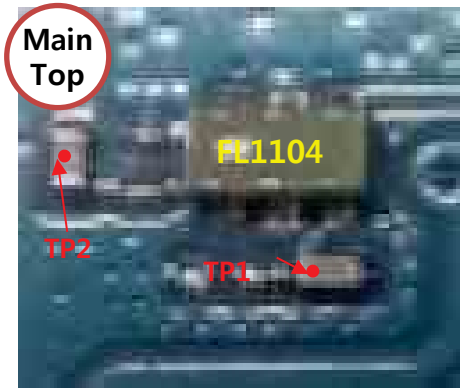

Circuit Diagram

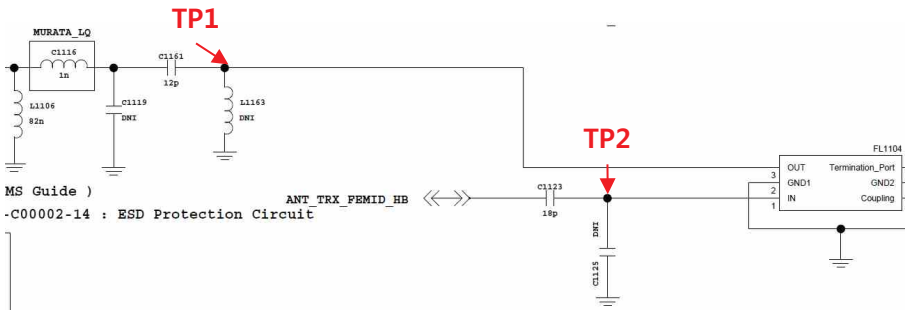

Copyright © 2015 LG Electronics. Inc. All right reserved. Only training and service purposes

3.7 LTE RF PART

3.7.14 Checking RF Signal TX path(LTE B3)

Checking Flow	Image
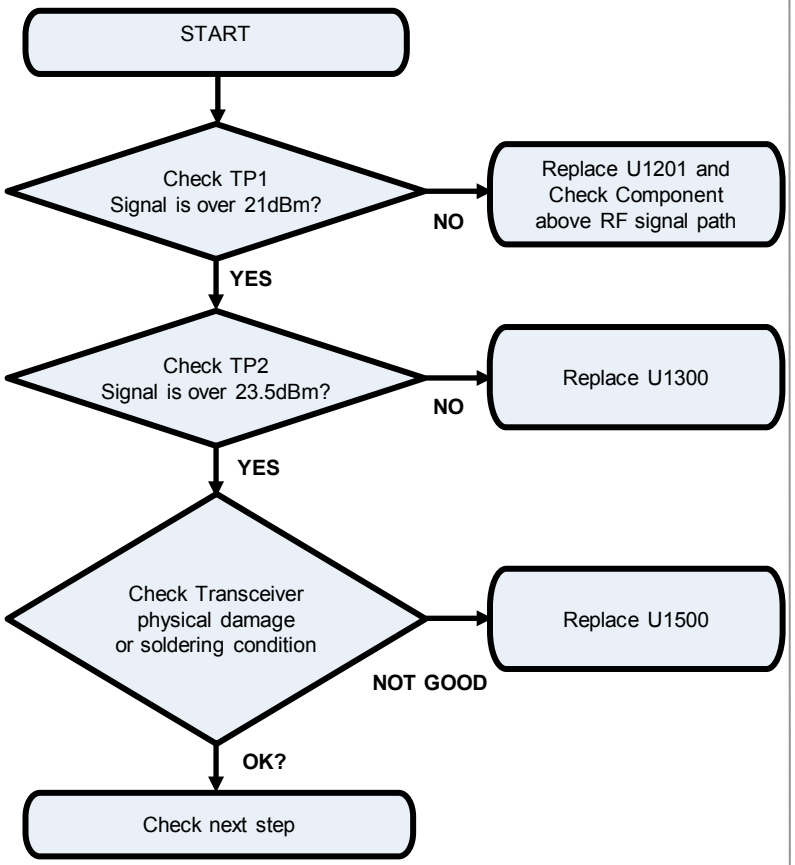	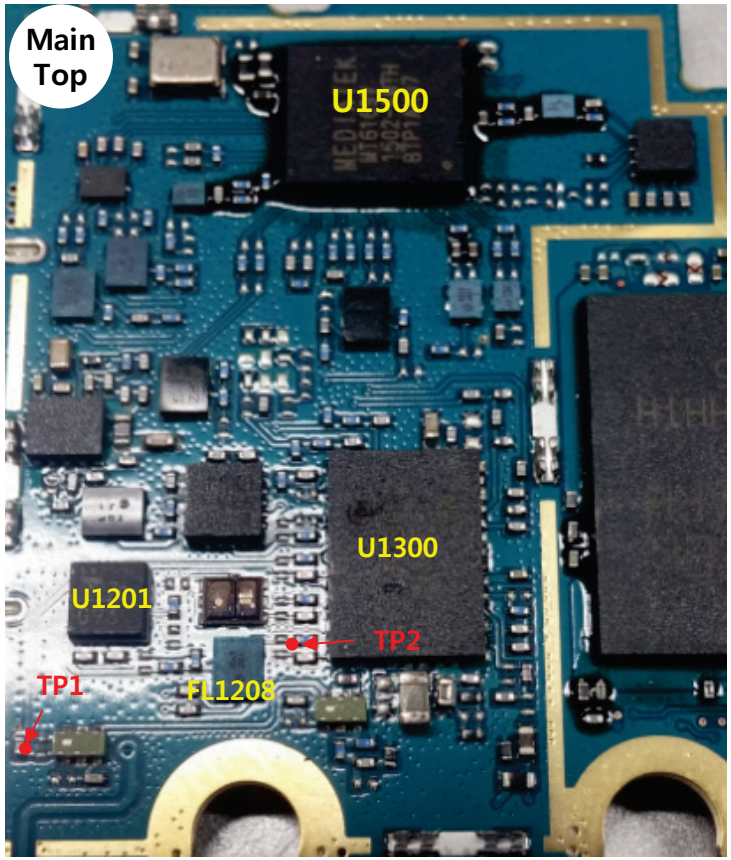

Copyright © 2015 LG Electronics. Inc. All right reserved. Only training and service purposes

3.7 LTE RF PART

3.7.14 Checking RF Signal TX path(LTE B3)

Circuit Diagram

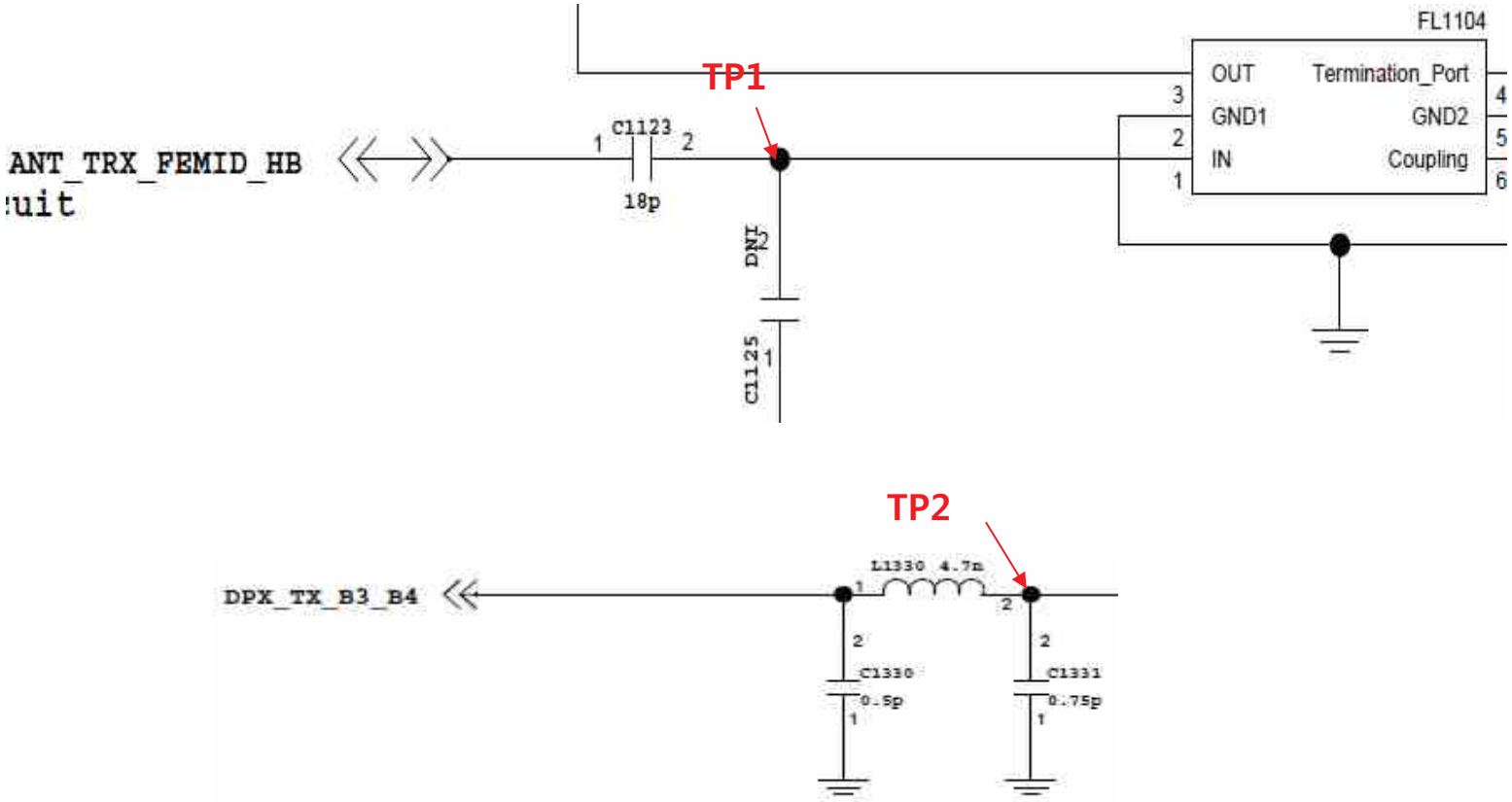

Copyright © 2015 LG Electronics. Inc. All right reserved. Only training and service purposes

3.7 LTE RF PART

3.7.15 Checking RF Signal TX path(SW, LTE B7/B28)

Checking Flow

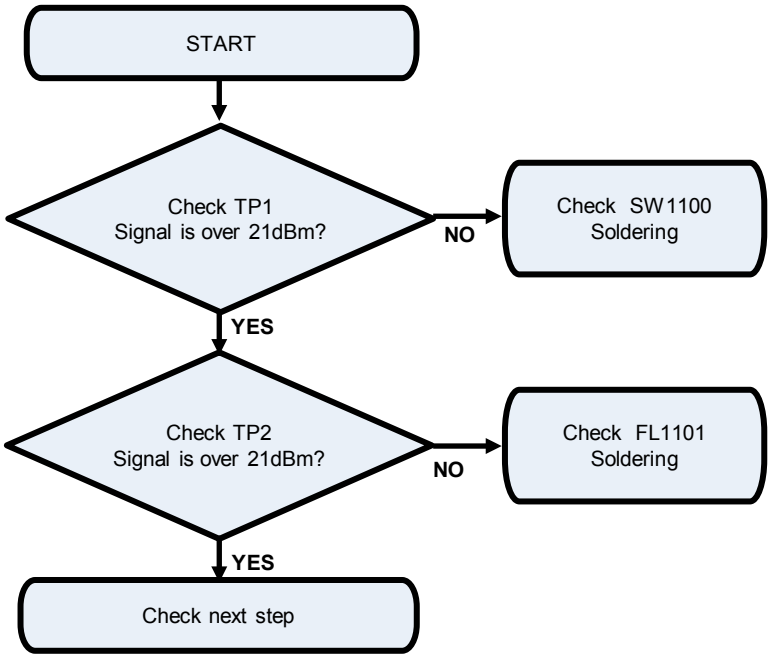

Image

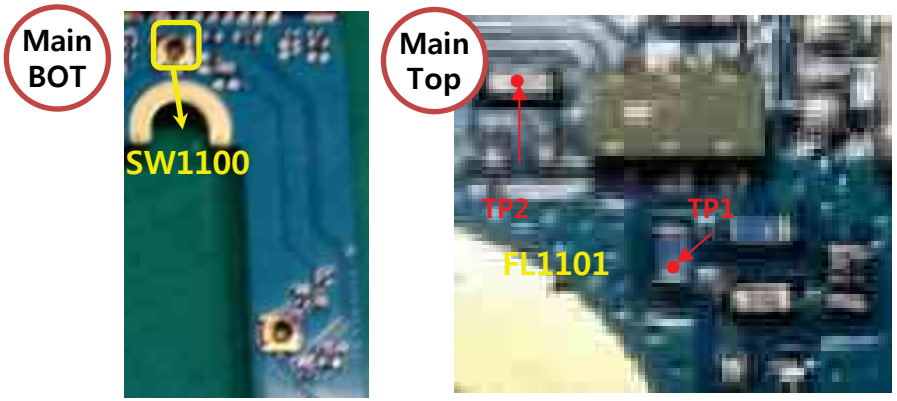

Circuit Diagram

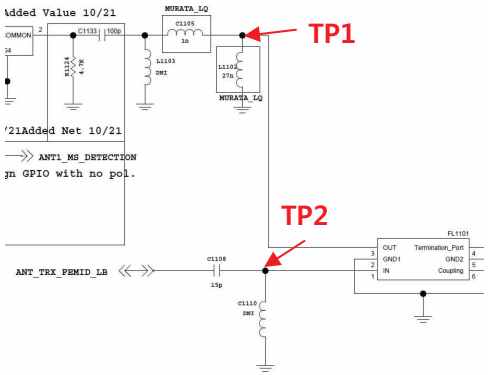

Copyright © 2015 LG Electronics. Inc. All right reserved. Only training and service purposes

3.7 LTE RF PART

3.7.16 Checking RF Signal TX path(LTE B7)

Checking Flow

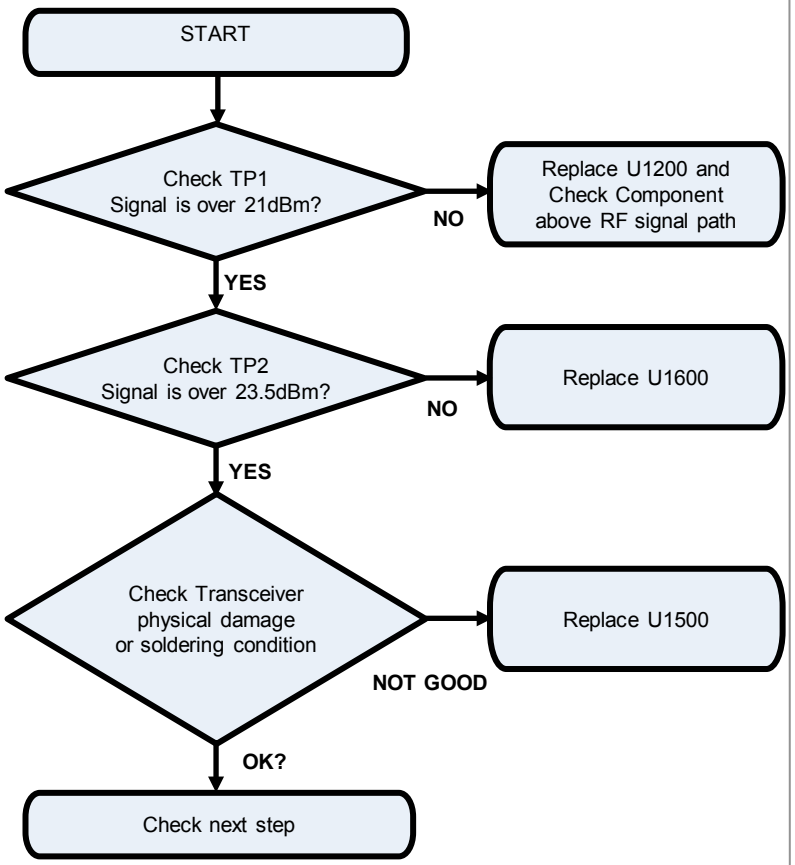

Image

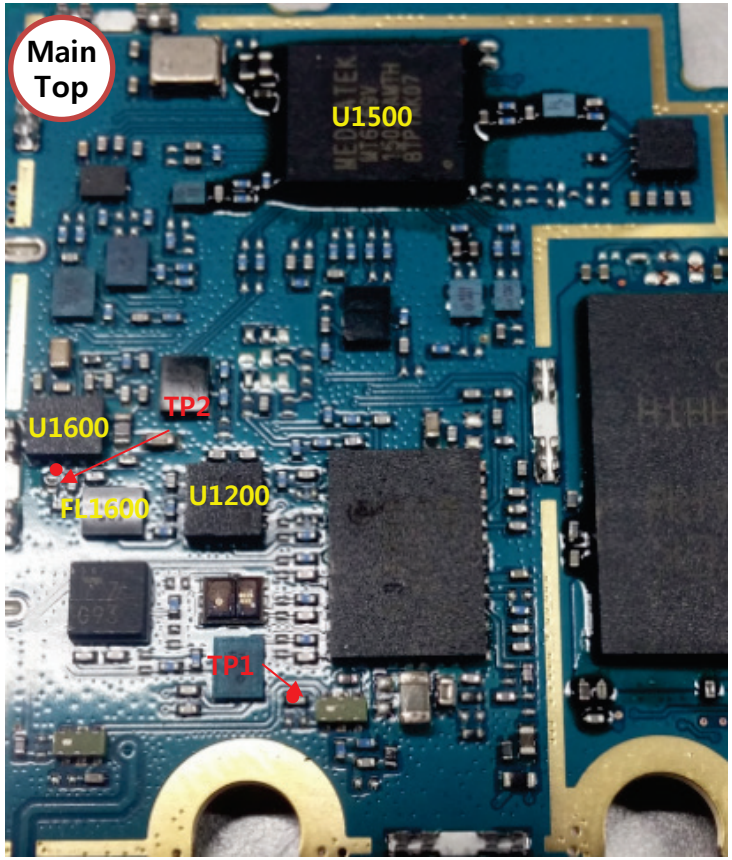

Copyright © 2015 LG Electronics. Inc. All right reserved. Only training and service purposes

3.7 LTE RF PART

3.7.16 Checking RF Signal TX path(LTE B7)

Circuit Diagram

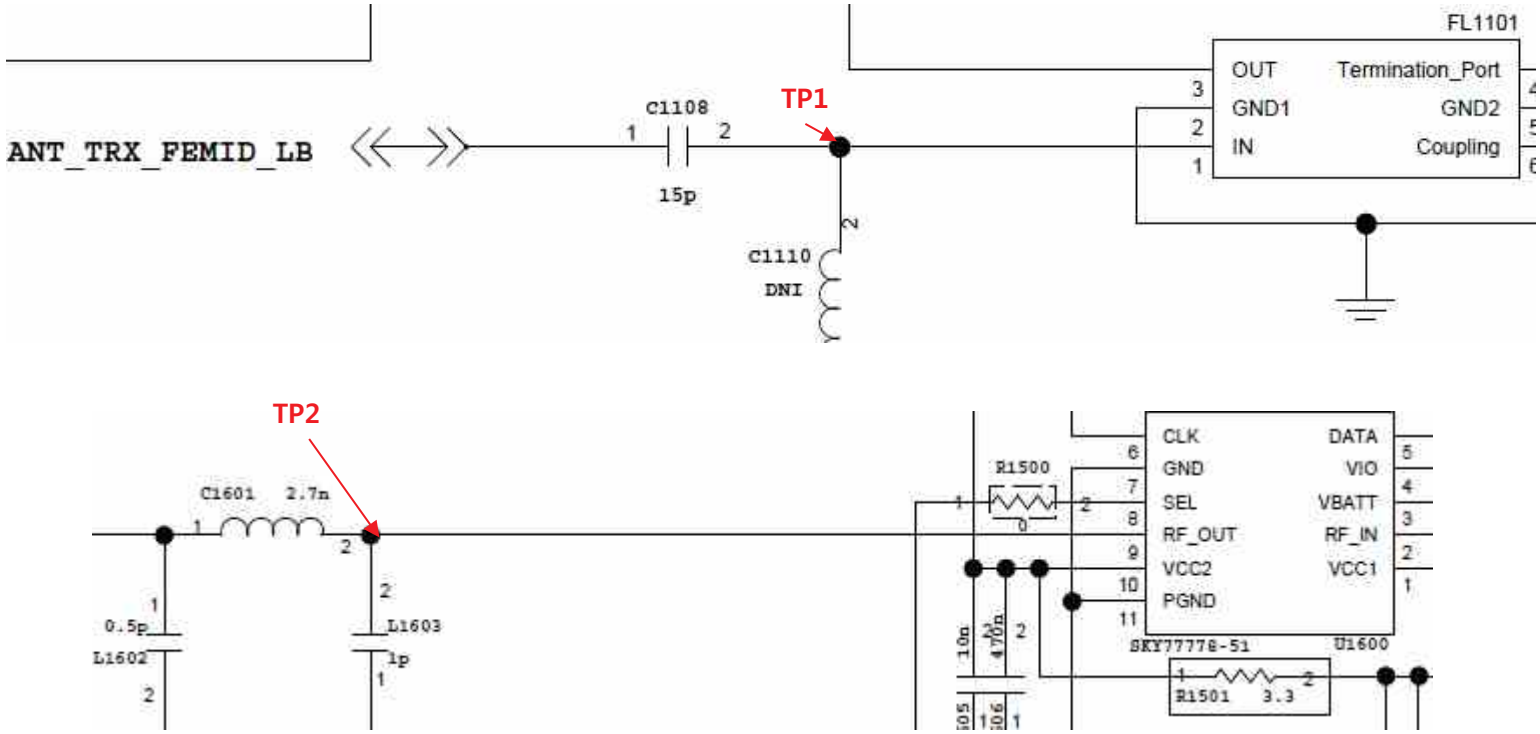

Copyright © 2015 LG Electronics. Inc. All right reserved. Only training and service purposes

3.7 LTE RF PART

3.7.17 Checking RF Signal TX path(LTE B28)

Checking Flow

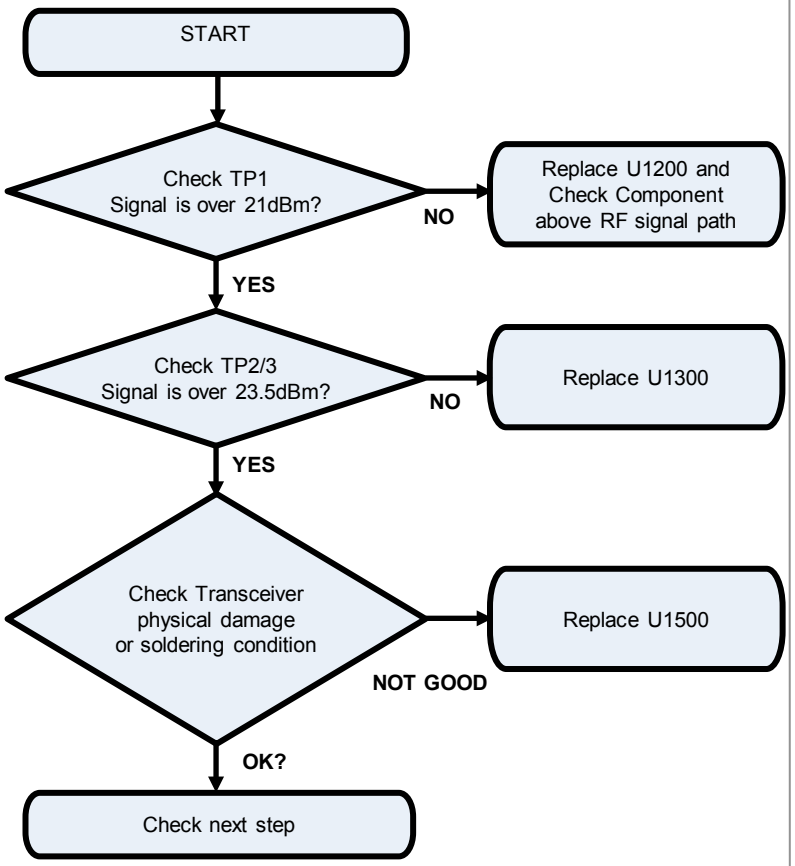

Image

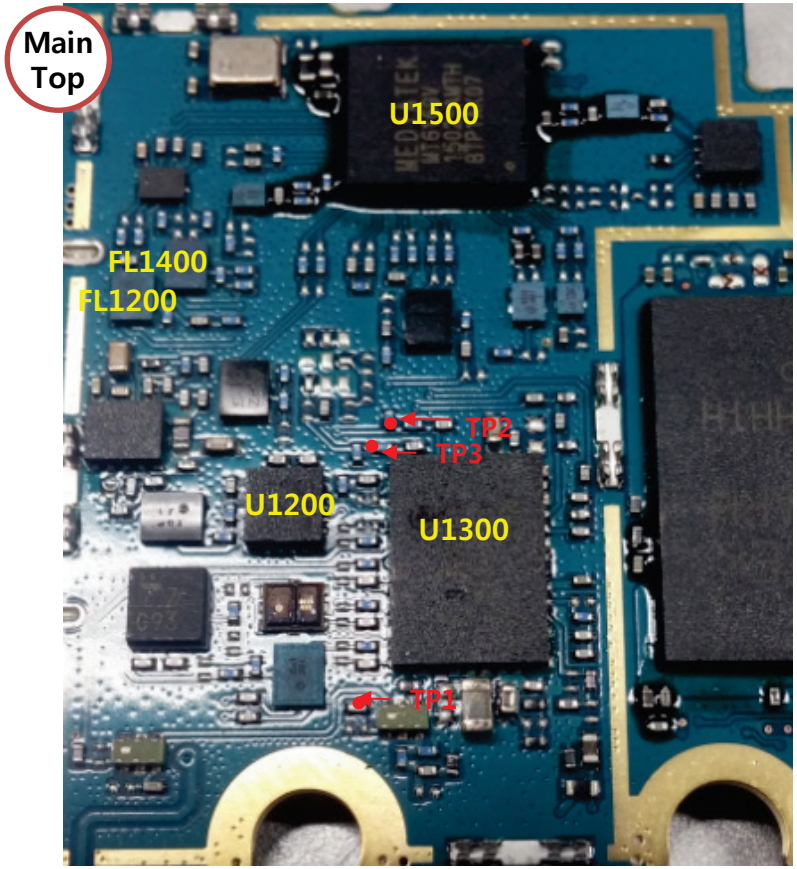

Copyright © 2015 LG Electronics. Inc. All right reserved. Only training and service purposes

3.7 LTE RF PART

3.7.17 Checking RF Signal TX path(LTE B28)

Circuit Diagram

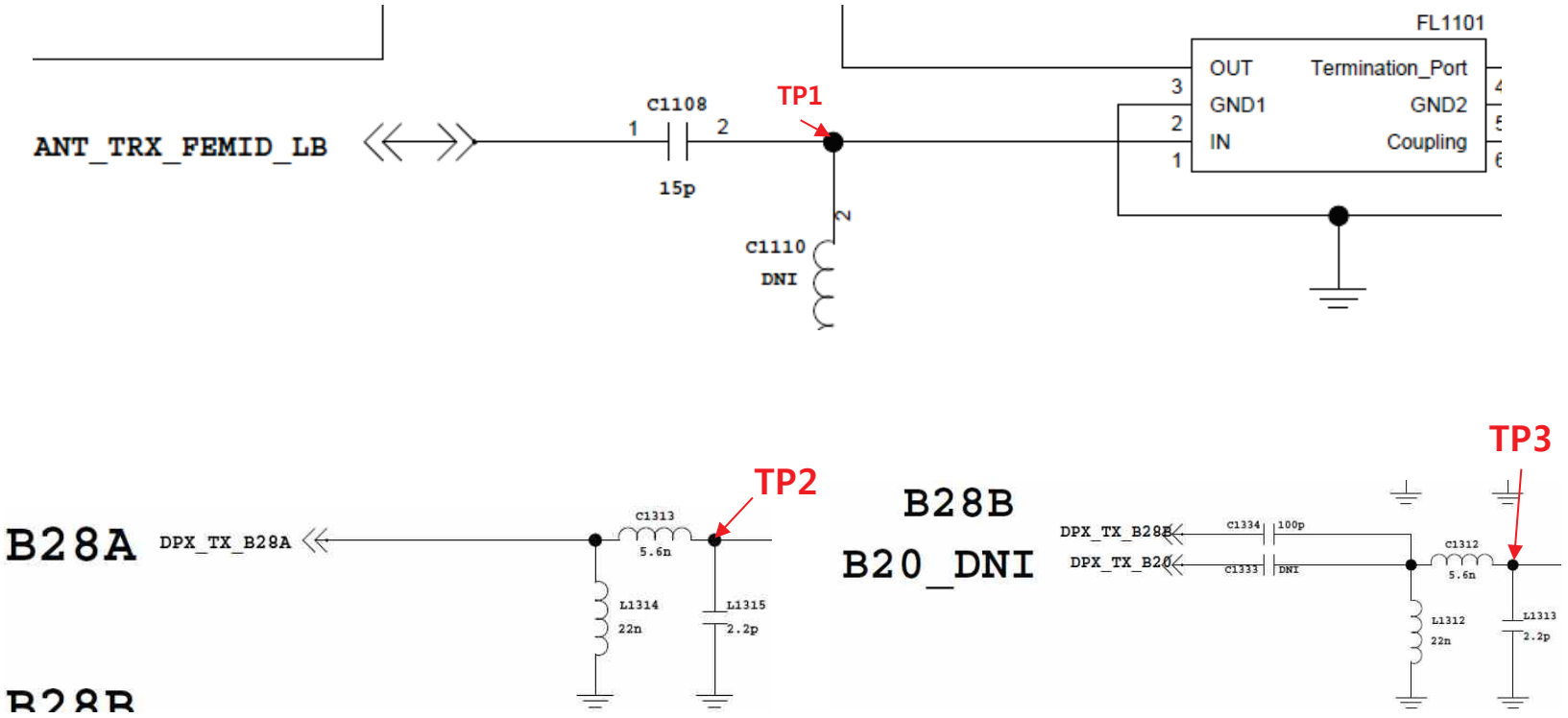

Copyright © 2015 LG Electronics. Inc. All right reserved. Only training and service purposes

3.8 Power

Checking Power signal (Battery connector, Power Key, PMIC Regulator)

Checking Flow

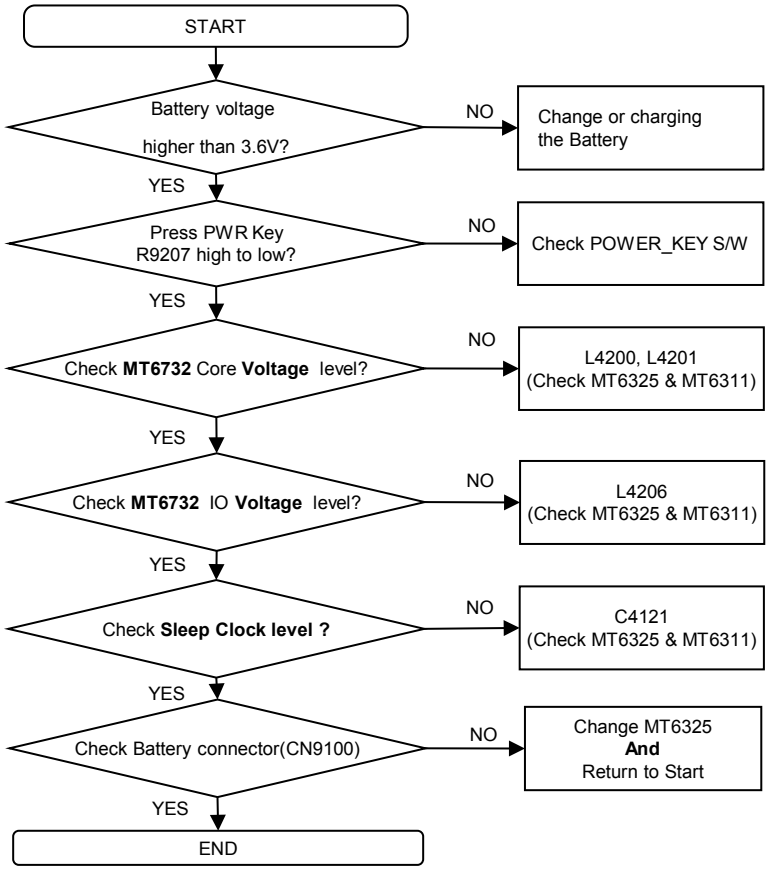

Image

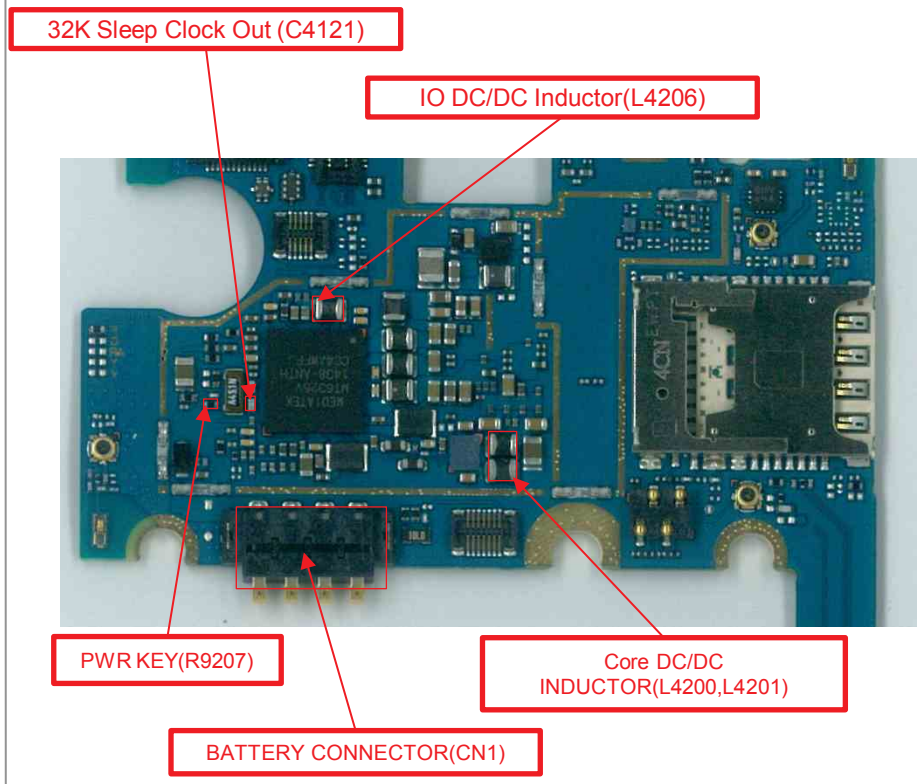

Copyright © 2015 LG Electronics. Inc. All right reserved. Only training and service purposes

3.8 Power

Checking Power signal (Battery connector, Power Key, PMIC Regulator)

Circuit Diagram

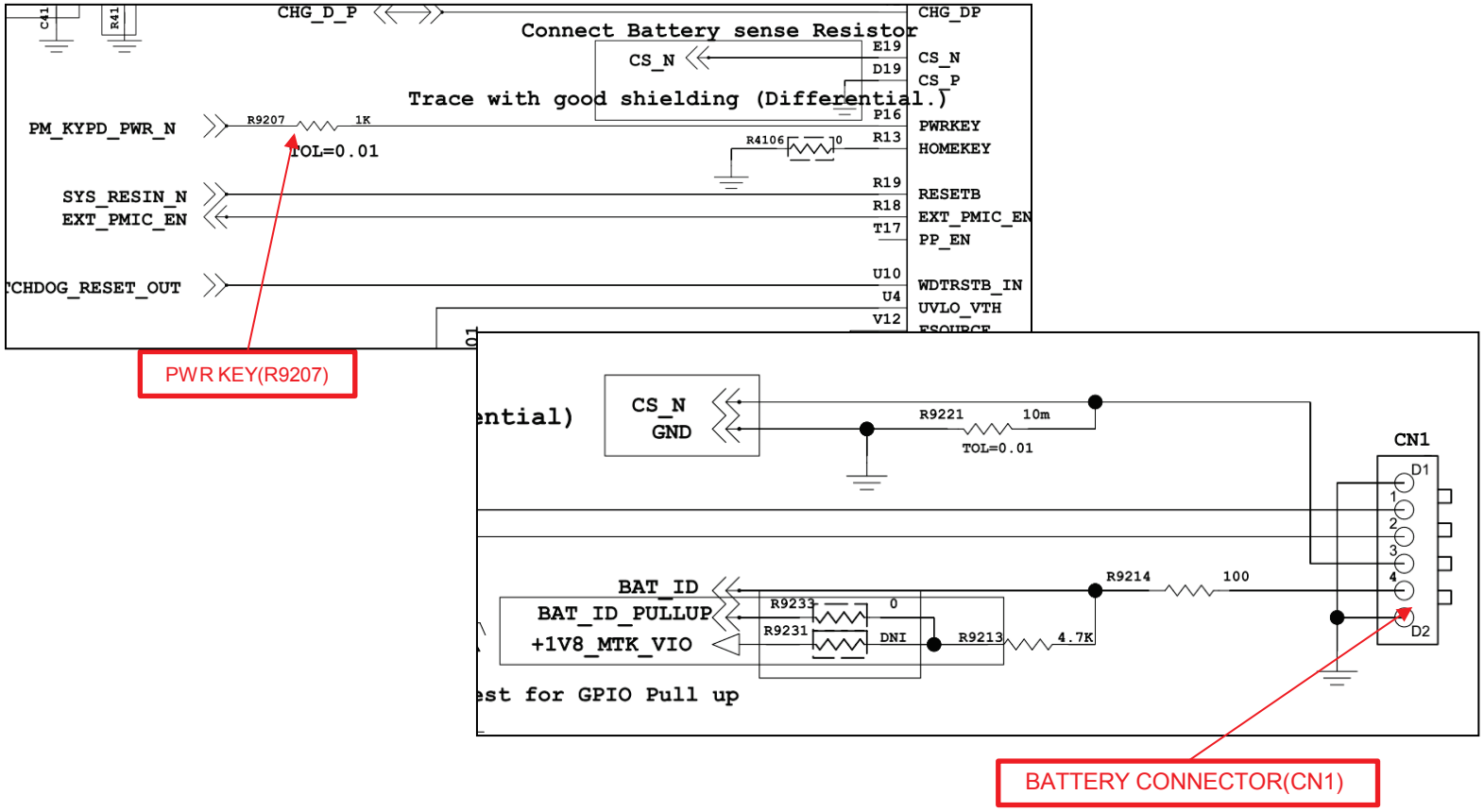

Copyright © 2015 LG Electronics. Inc. All right reserved. Only training and service purposes

3.8 Power

Checking Power signal (Battery connector, Power Key, PMIC Regulator)

Circuit Diagram

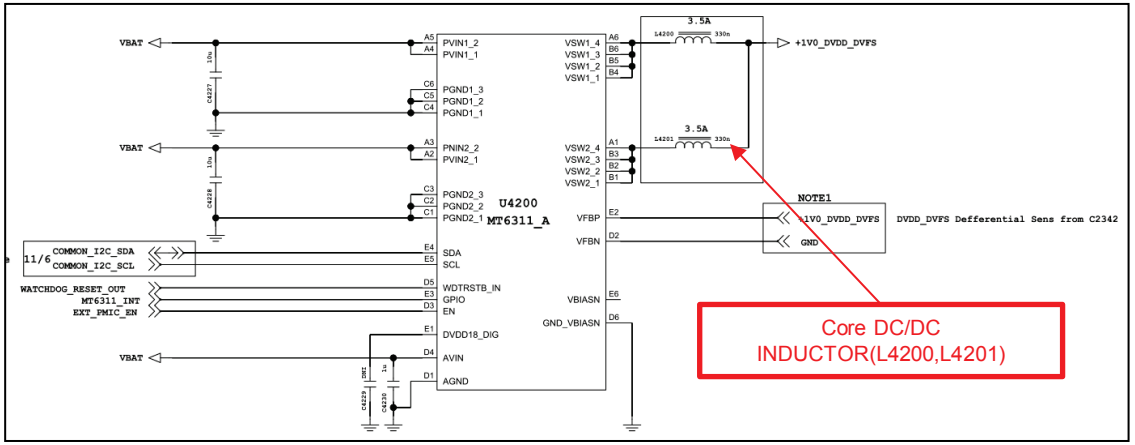

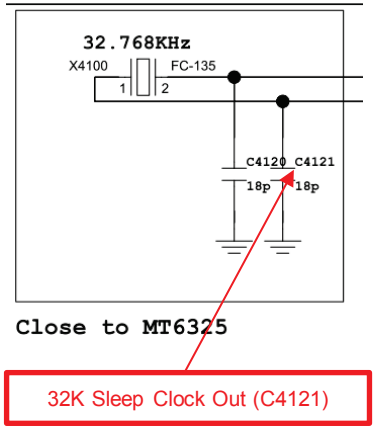

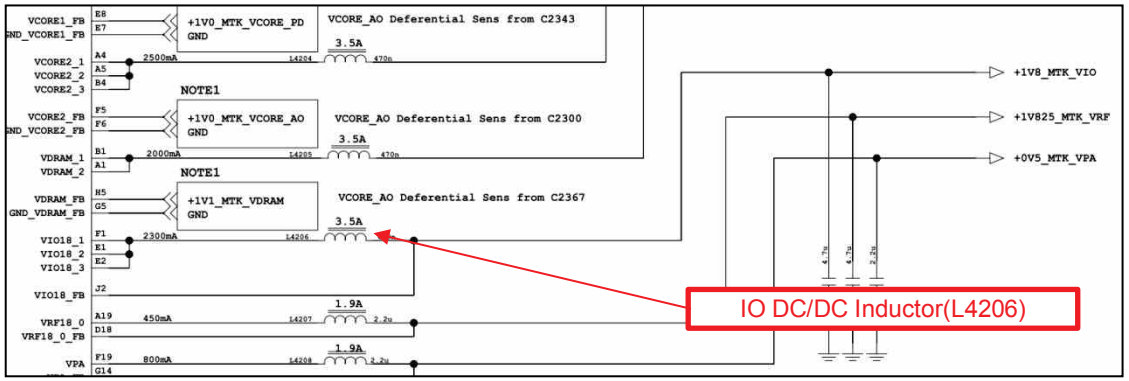

Copyright © 2015 LG Electronics. Inc. All right reserved. Only training and service purposes

3.9 Charger

The I/O connector and uUSB cable voltage(5.0V) is used as the reference one of PMIC for charging.

Checking Flow	Image
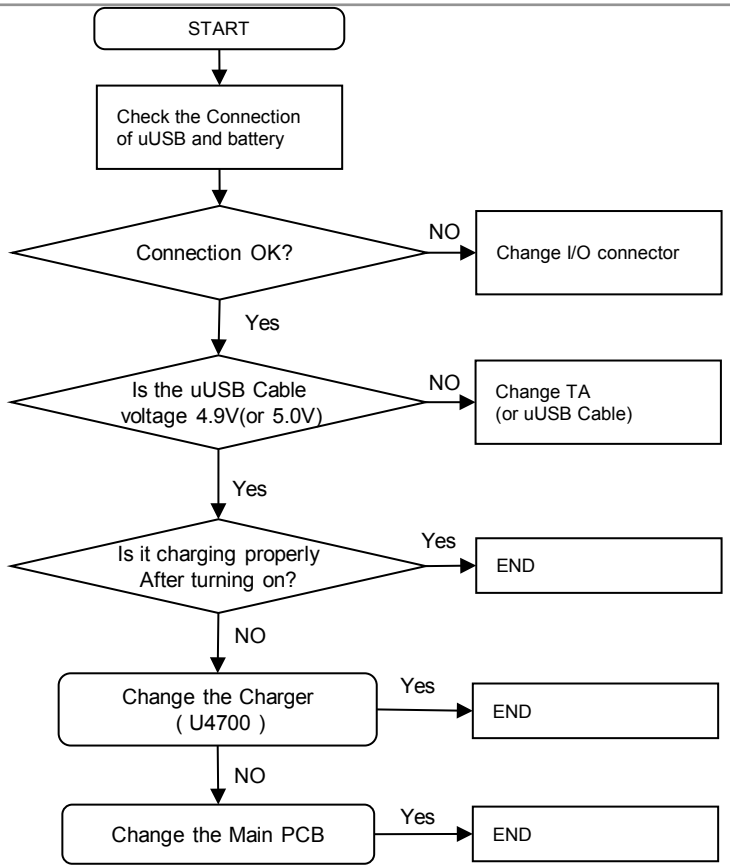	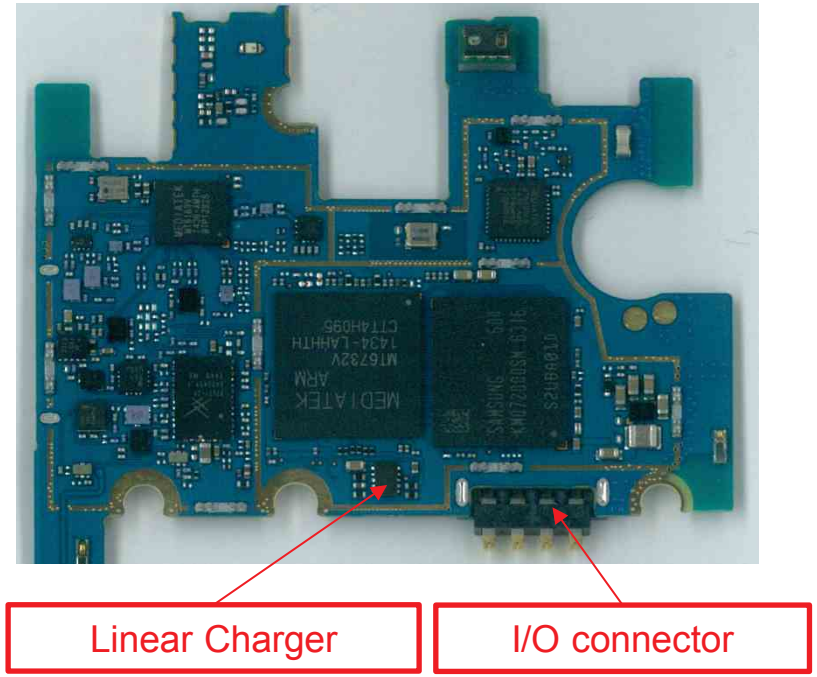

Copyright © 2015 LG Electronics. Inc. All right reserved. Only training and service purposes

3.10 Audio Block(3.10.1 Audio receiver)

The receiver control signals are generated by MT6325(U4100), the MT6325 chip and the receiver are to be checked out.

Checking Flow	Image

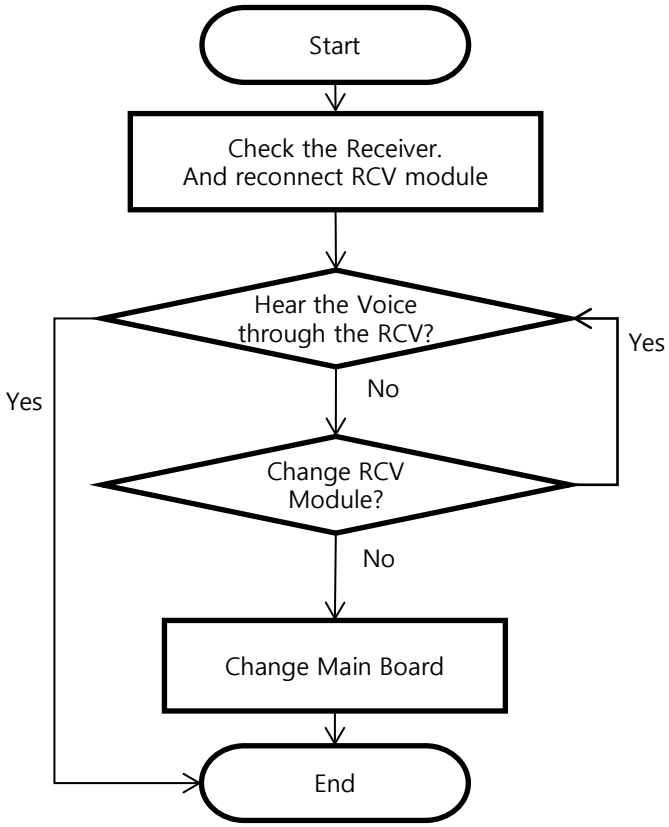

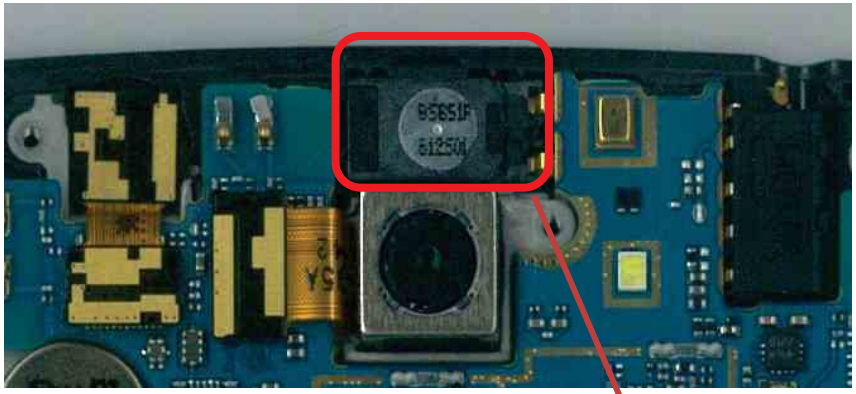

Circuit Diagram

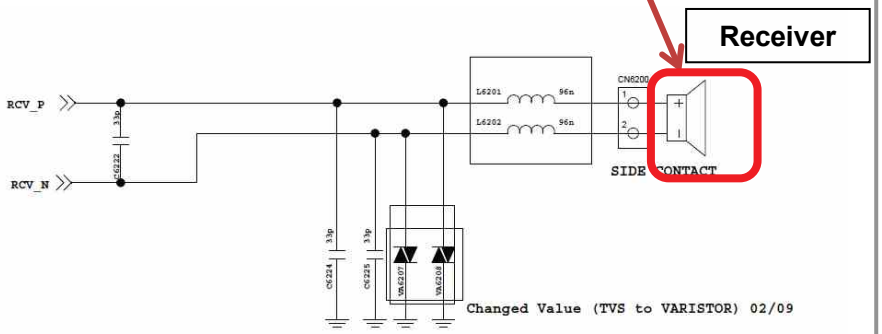

Copyright © 2015 LG Electronics. Inc. All right reserved. Only training and service purposes

3.10.2 Audio_speaker

The Speaker control signals are generated by MT6325(U4100), the MT6325 chip and the speaker are to be checked out.

Checking Flow	Image
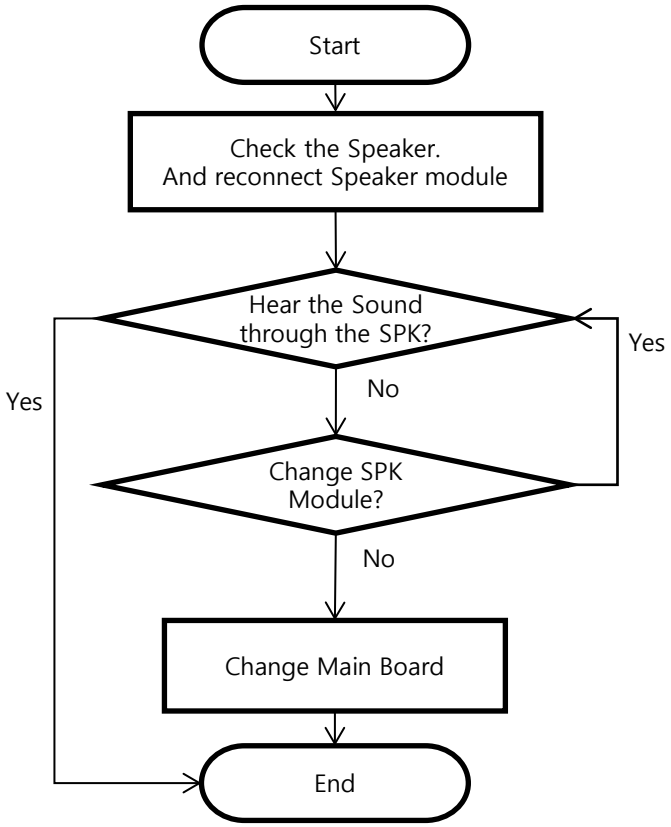	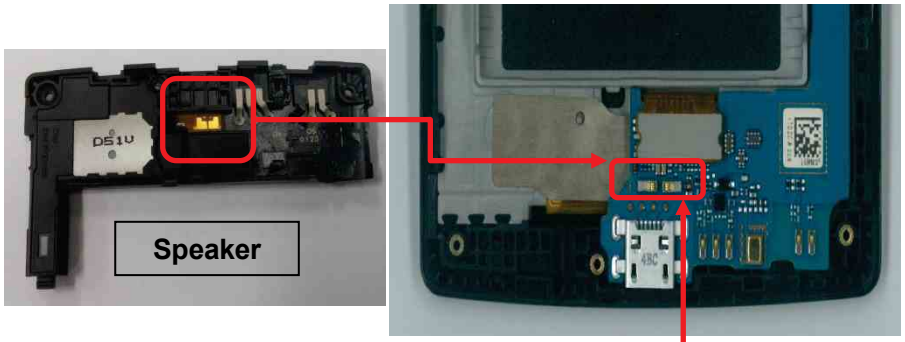
	Circuit Diagram
	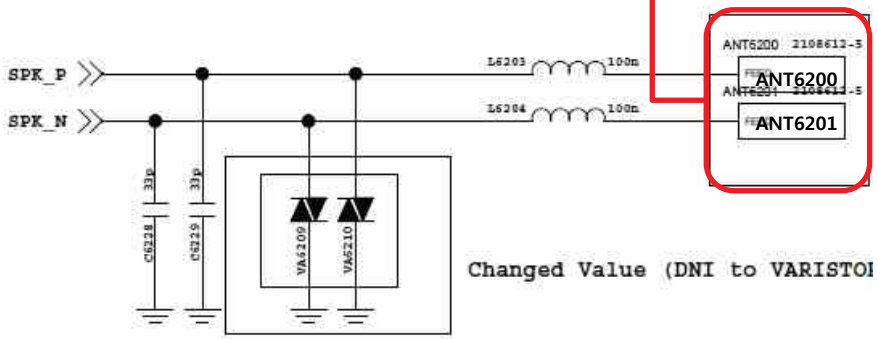

Copyright © 2015 LG Electronics. Inc. All right reserved. Only training and service purposes

3.10.3 Audio_Main MIC

It's operating voice call(except speakerphone), voice recording, camcorder recording.

Checking Flow	Image

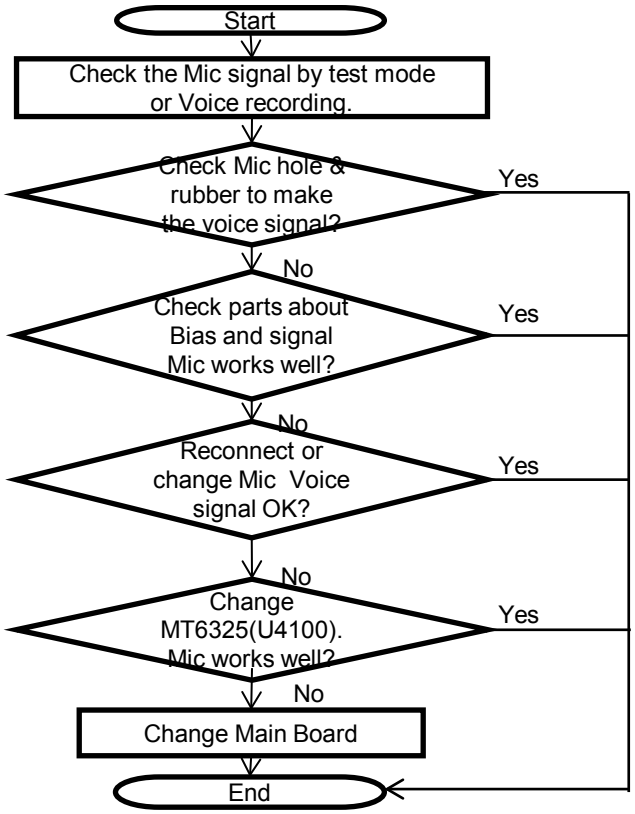

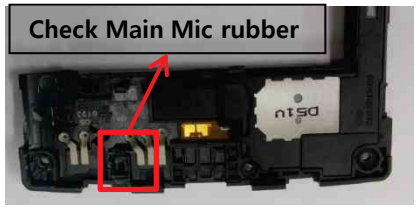

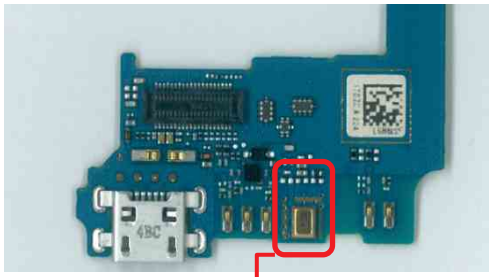

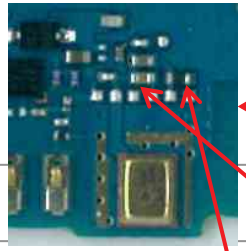

Circuit Diagram

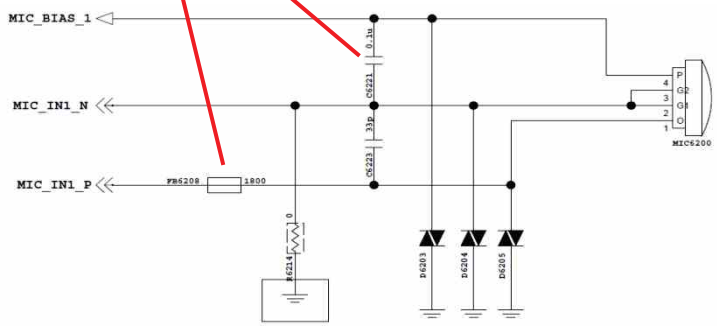

Check FB6208, VMIC voltage level (C6221)

Copyright © 2015 LG Electronics. Inc. All right reserved. Only training and service purposes

3.10.4 Audio_sub MIC

It's operating Speakerphone call.

Checking Flow	Image

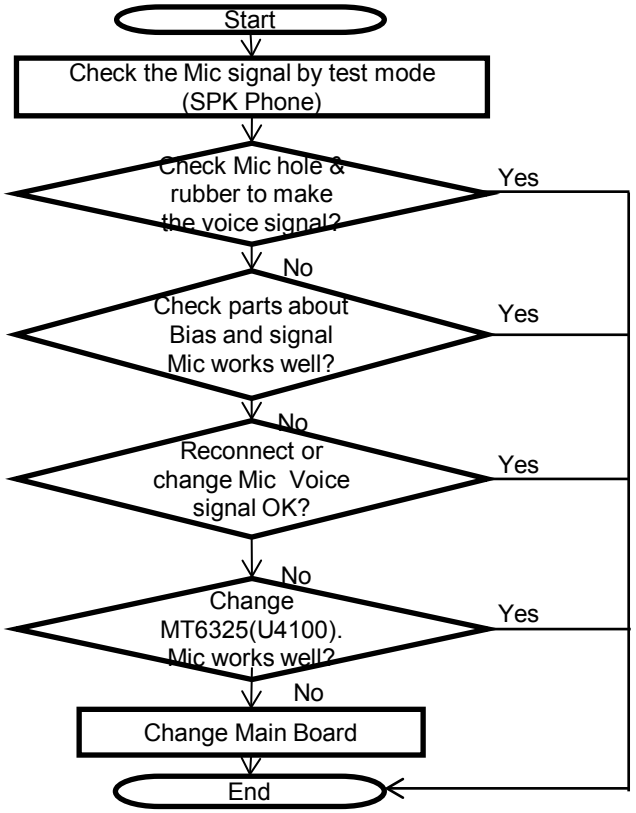

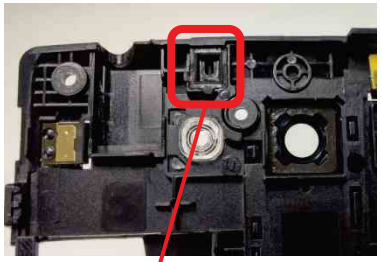

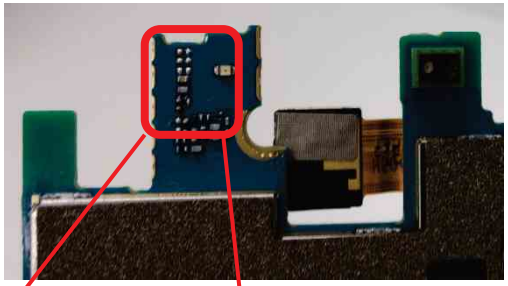

Check SUB Mic rubber

Circuit Diagram

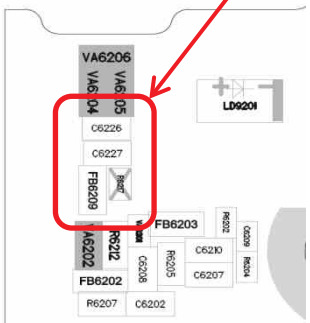

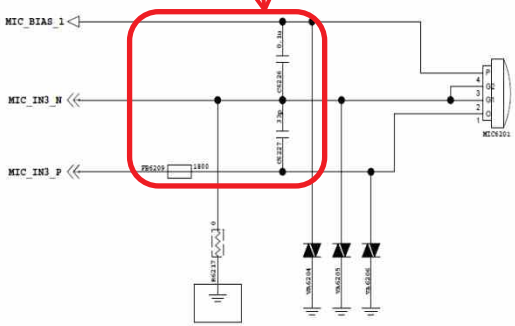

Check FB6209, , VMIC voltage level (C6226)

Copyright © 2015 LG Electronics. Inc. All right reserved. Only training and service purposes

3.10.5 Audio_Ear MIC Jack

Disable detecting headset insert or No sound from Earphone, Check the Ear Mic and MT6325

Checking Flow

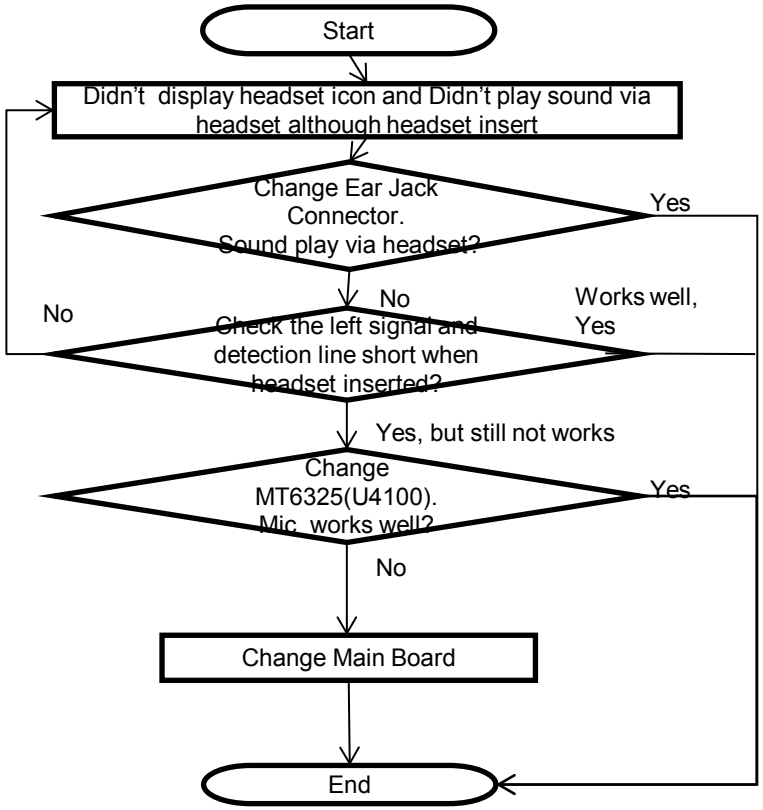

Image

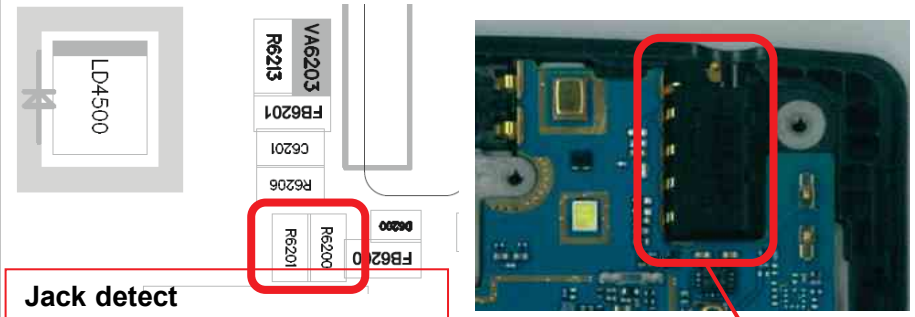

Jack detect
Voltage Level Check at R6201
- 1.8V(before Jack)
- low(after Jack)

Circuit Diagram

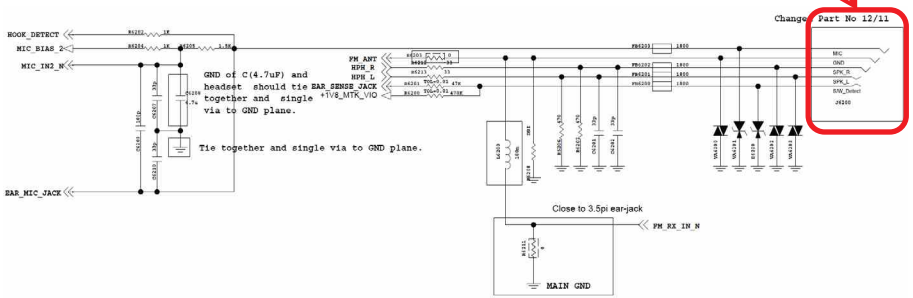

Copyright © 2015 LG Electronics. Inc. All right reserved. Only training and service purposes

3.10.6 FM_Radio

Disable detecting headset insert or No FM sound from Earphone, Check the Ear Mic and MT6625L

Checking Flow

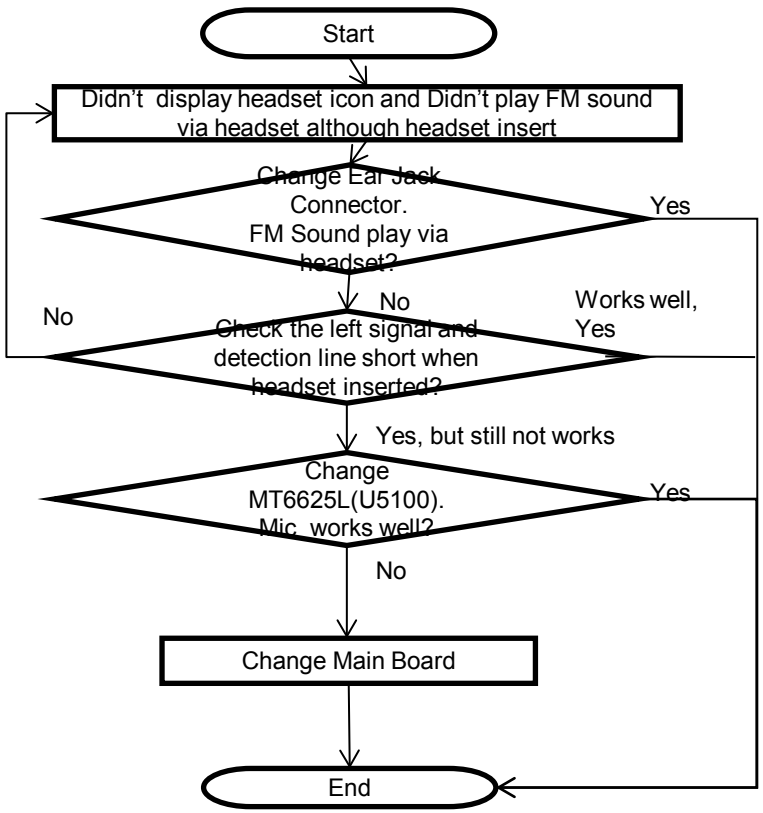

Image

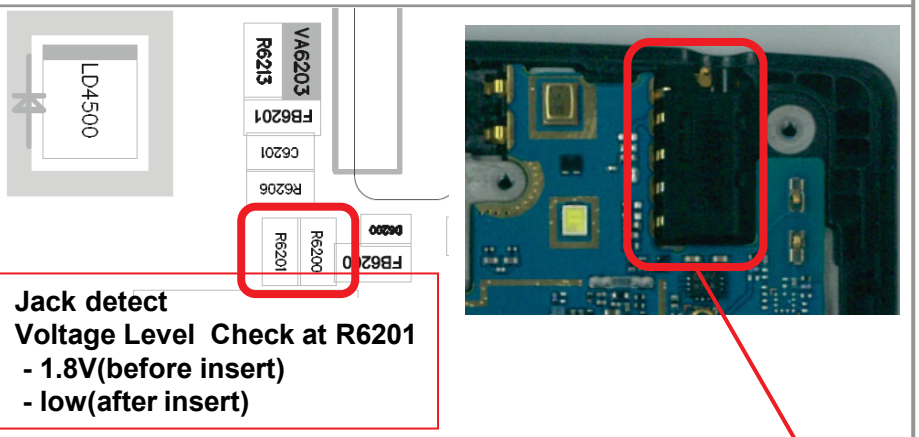

Jack detect
Voltage Level Check at R6201
- 1.8V(before insert)
- low(after insert)

Circuit Diagram

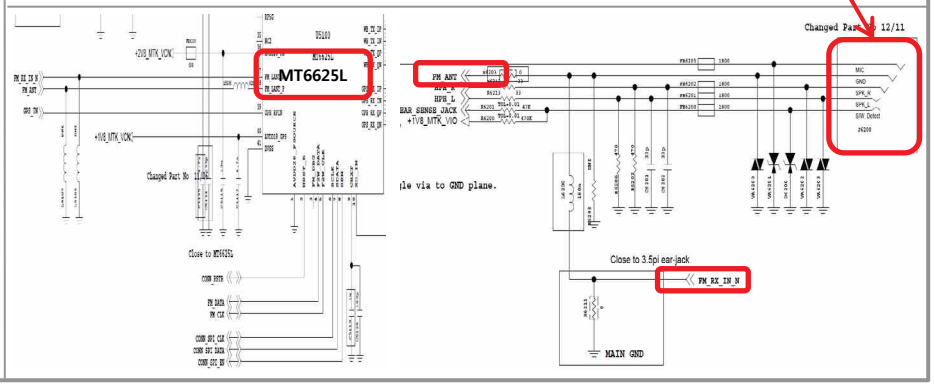

Copyright © 2015 LG Electronics. Inc. All right reserved. Only training and service purposes

3.11 Checking LCD Block

The LCD control signals are generated by MT6732. Its interface is MIPI having four data lanes and one clock lane.

Checking Flow	Image
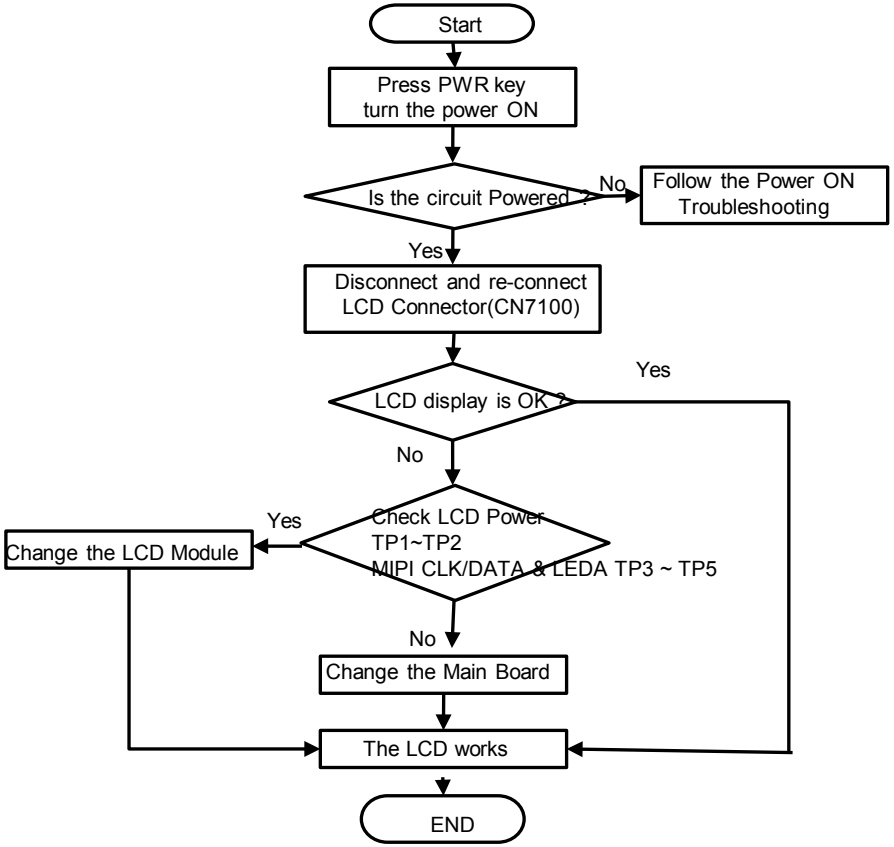	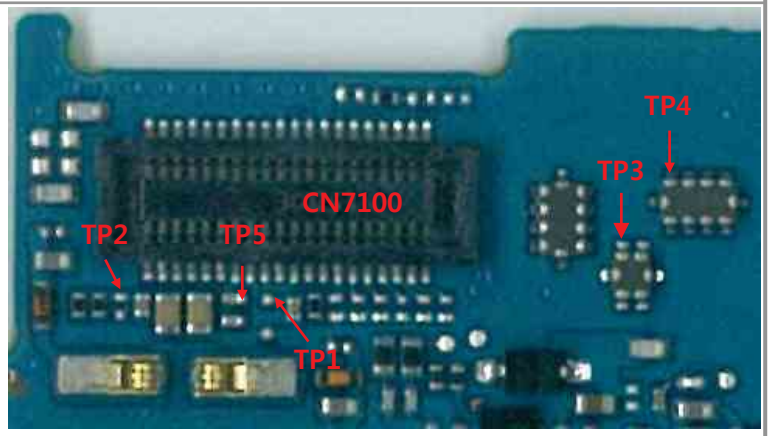

Copyright © 2015 LG Electronics. Inc. All right reserved. Only training and service purposes

3.11 Checking LCD Block

The LCD control signals are generated by MT6732. Its interface is MIPI having four data lanes and one clock lane.

Circuit Diagram

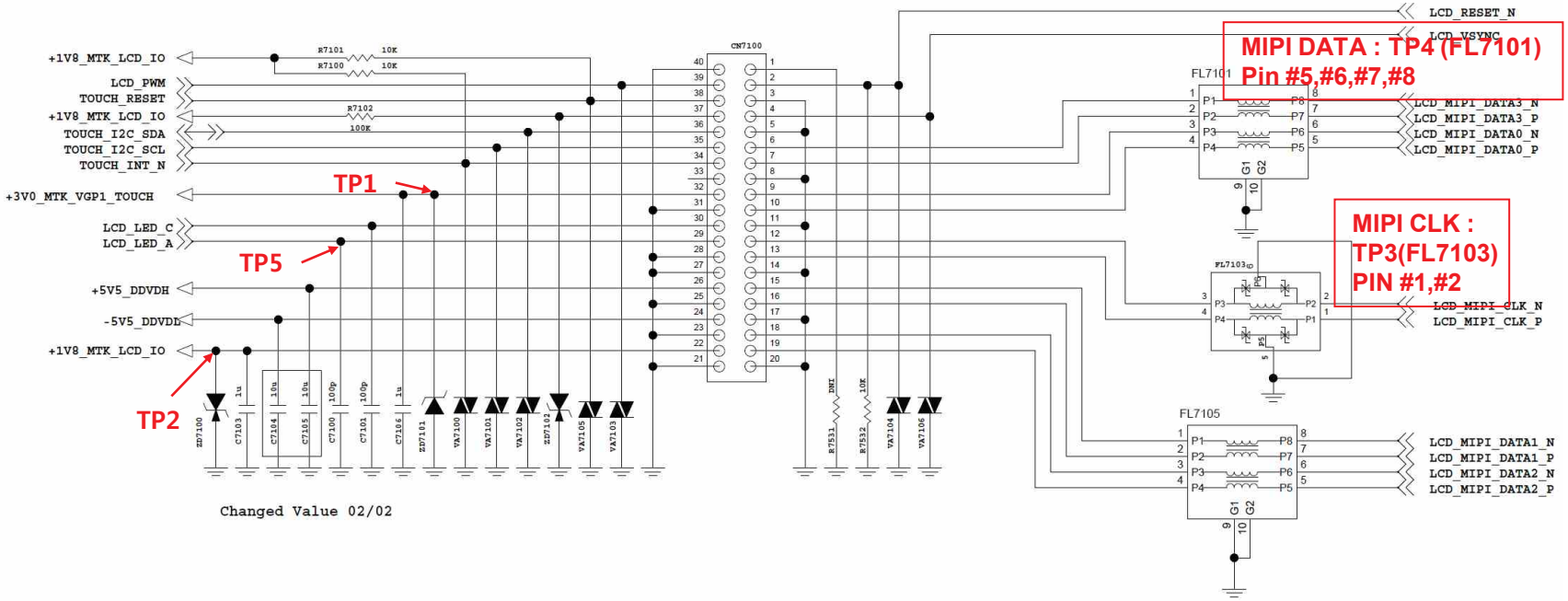

Copyright © 2015 LG Electronics. Inc. All right reserved. Only training and service purposes

3.12 Checking Touch Block

The Touch control signals are generated by MT6732. It is assembled with LCD.

Checking Flow	Image
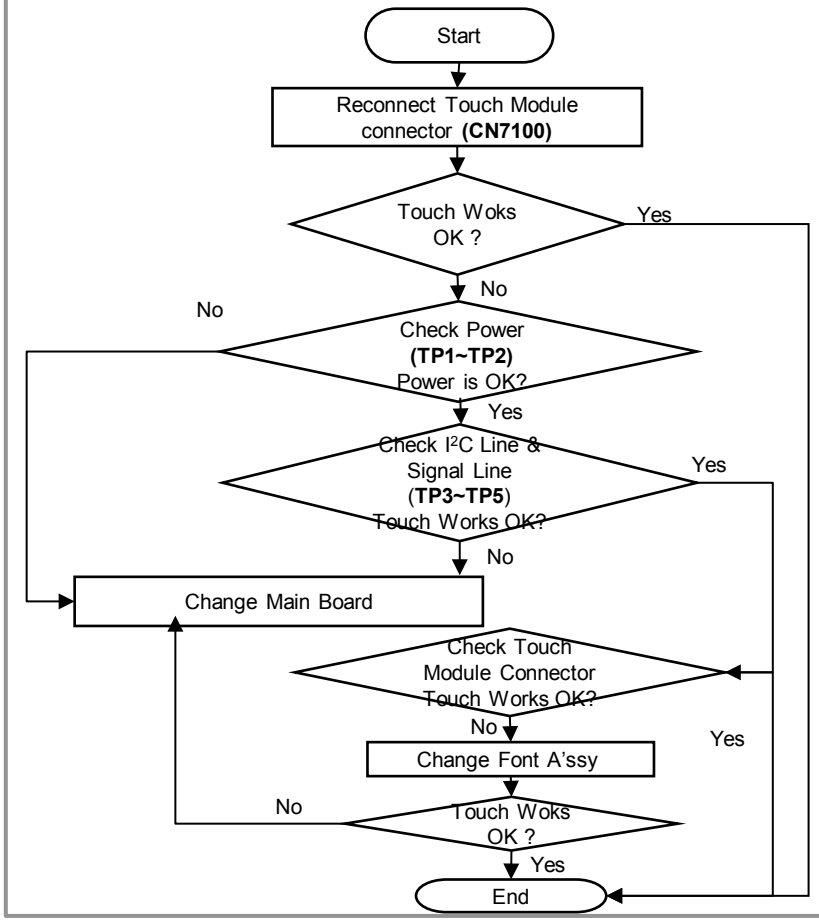	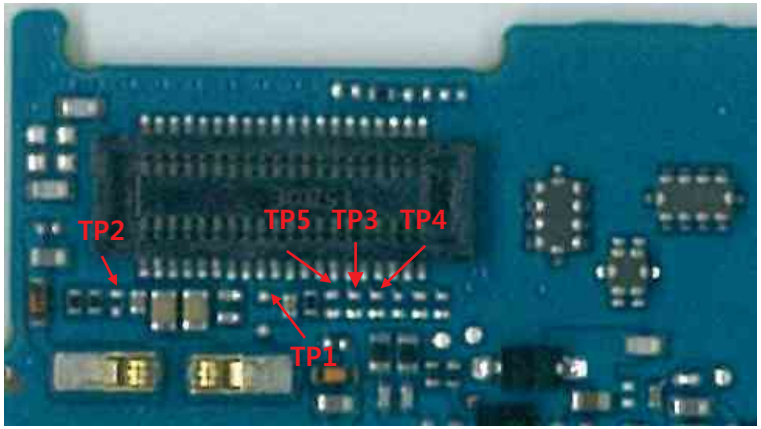

Copyright © 2015 LG Electronics. Inc. All right reserved. Only training and service purposes

3.12 Checking Touch Block

The Touch control signals are generated by MT6732. It is assembled with LCD.

Circuit Diagram

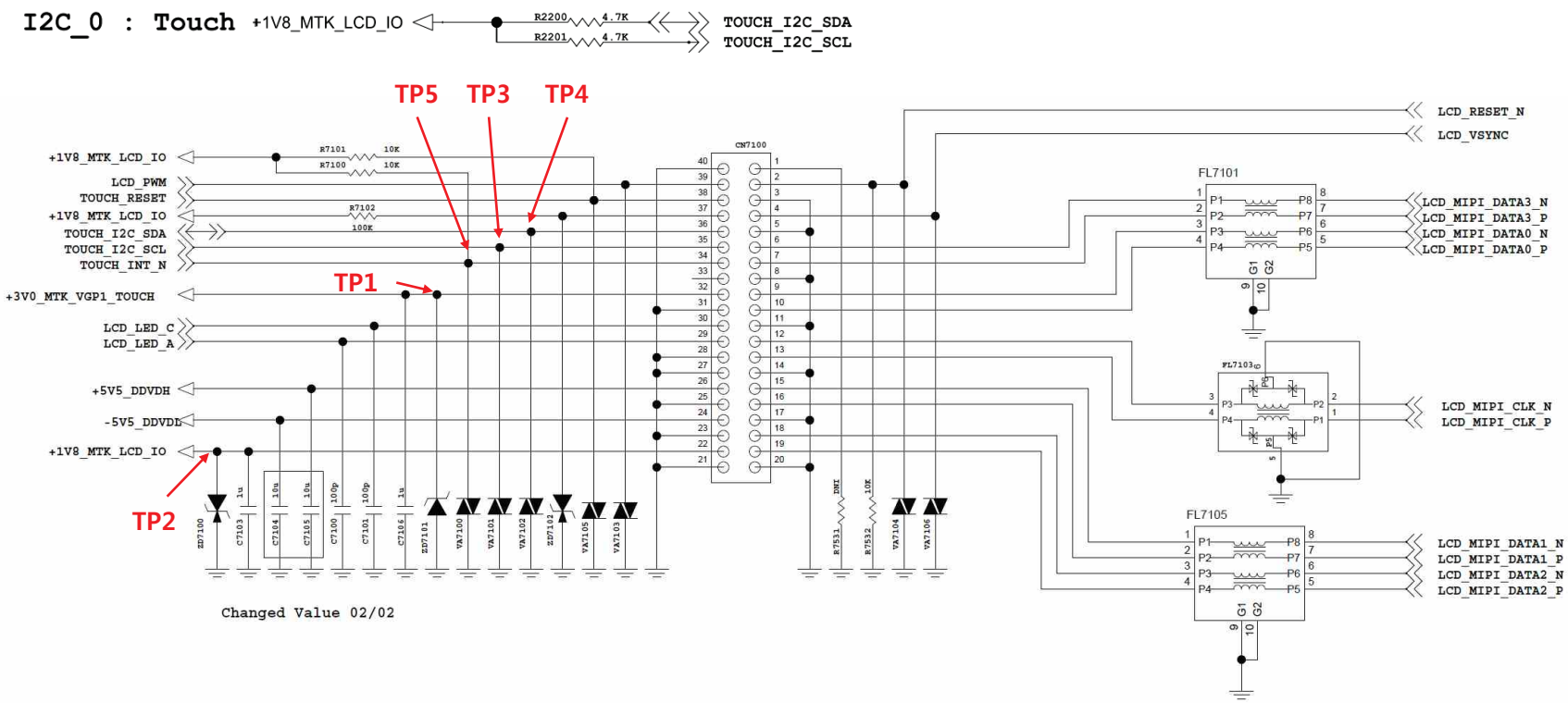

Copyright © 2015 LG Electronics. Inc. All right reserved. Only training and service purposes

3.13 Checking accelmeter+compass sensor Block

The Accl. & compass sensors are calibrated by using SW algorithm.

Checking Flow

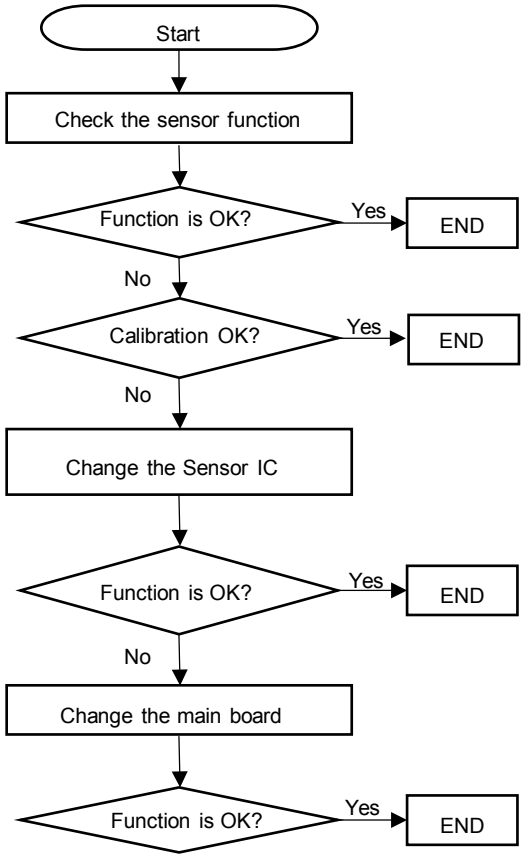

Image

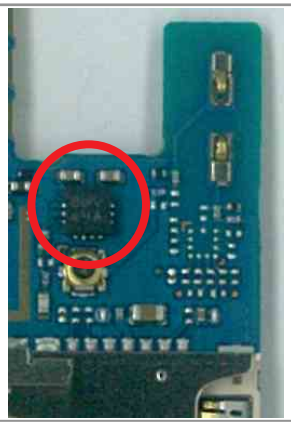

Circuit Diagram

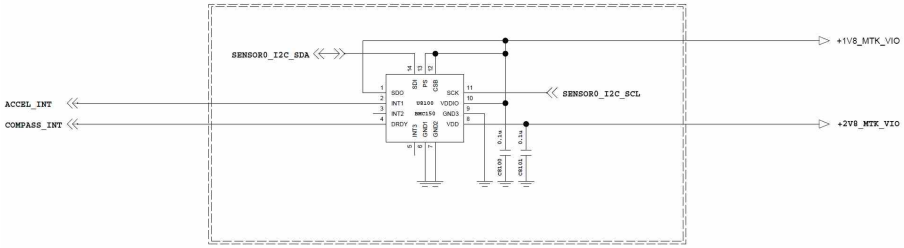

Copyright © 2015 LG Electronics. Inc. All right reserved. Only training and service purposes

3.13 Checking proximity sensor Block

Proximity Sensor is worked as below: Send Key click ➔ Phone number click ➔ Call connected ➔ Object moved at the sensor ➔ Control the screen's on/off operation automatically

Checking Flow

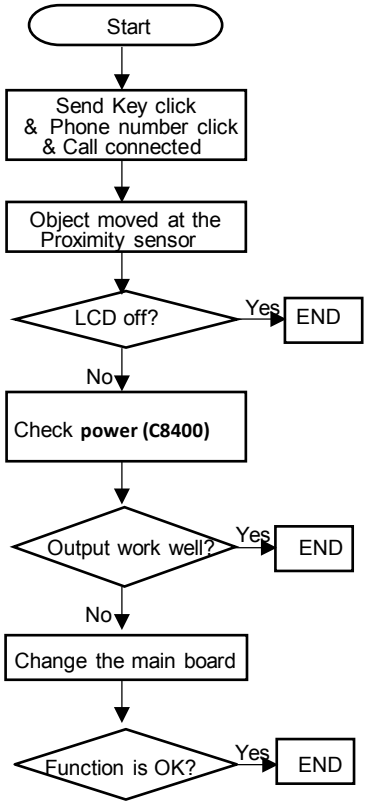

Image

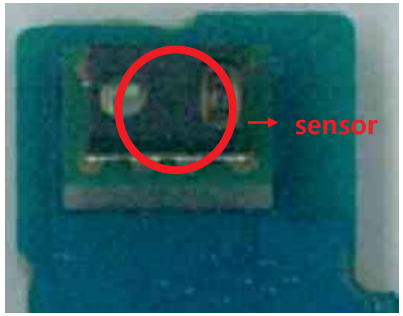

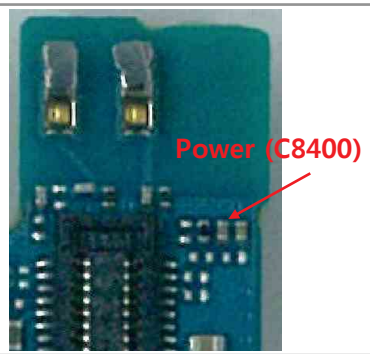

Circuit Diagram

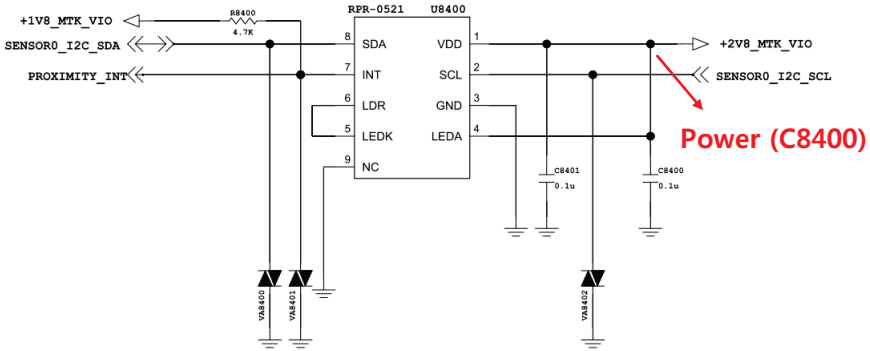

Copyright © 2015 LG Electronics. Inc. All right reserved. Only training and service purposes

3.14 Checking USB Block

I/O connector is used as the USB port.

Checking Flow	Image
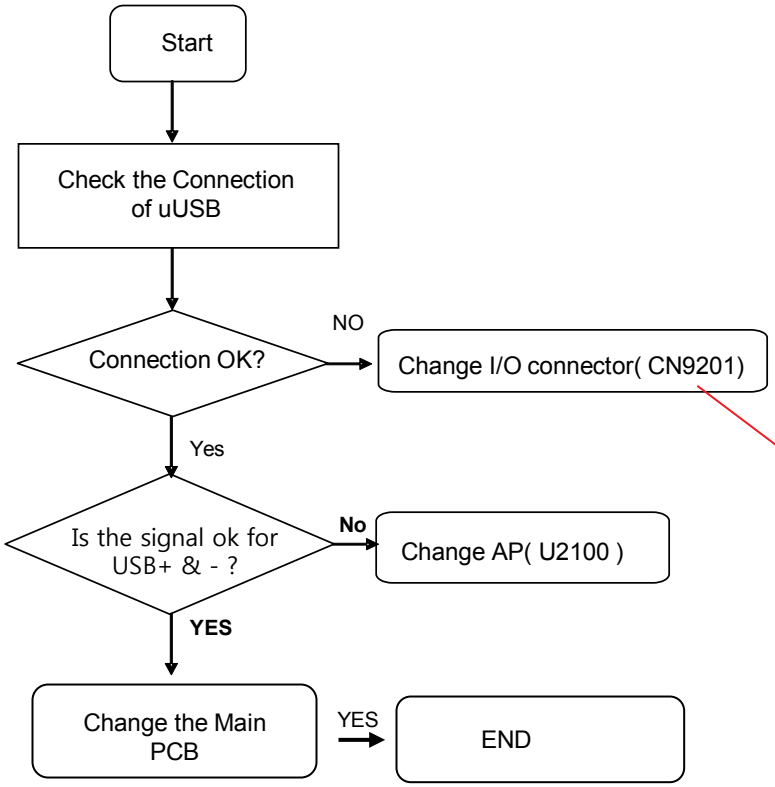	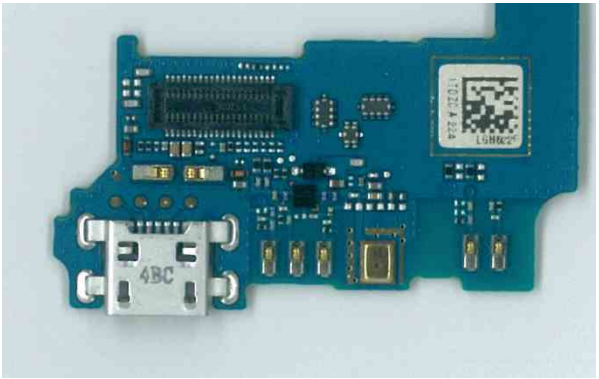
	Circuit Diagram
	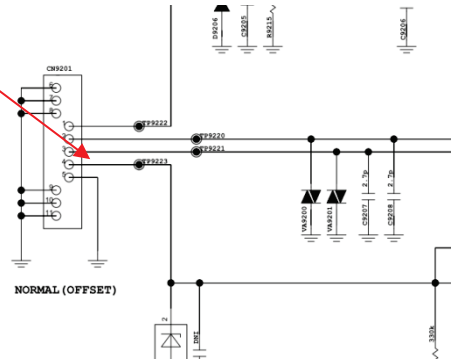

Copyright © 2015 LG Electronics. Inc. All right reserved. Only training and service purposes

3.15 Checking Main camera Block

8M camera control signals are generated by MT6732 (U2100 : Main Chipset). And powered by MT6325 (U4100 : PMIC).

Checking Flow	Image
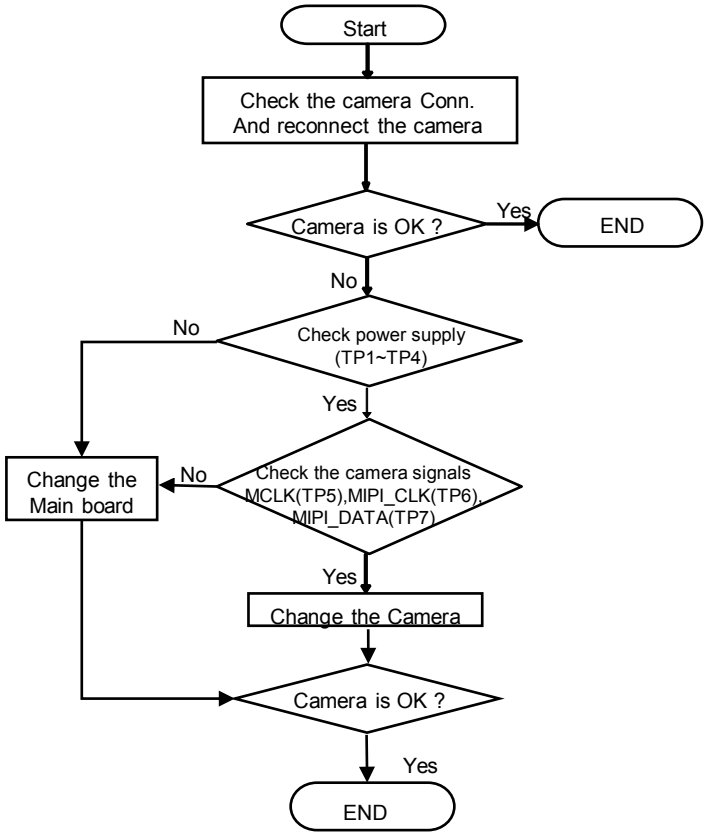	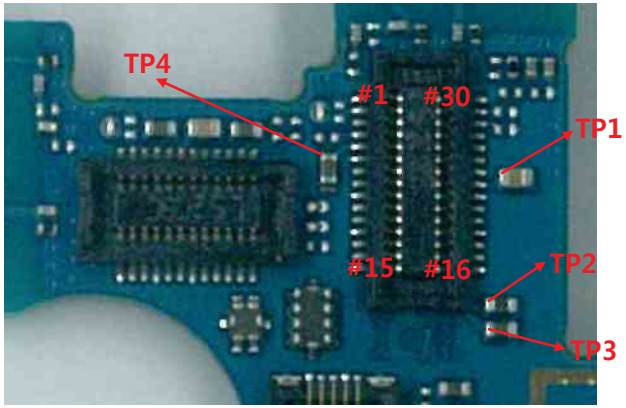 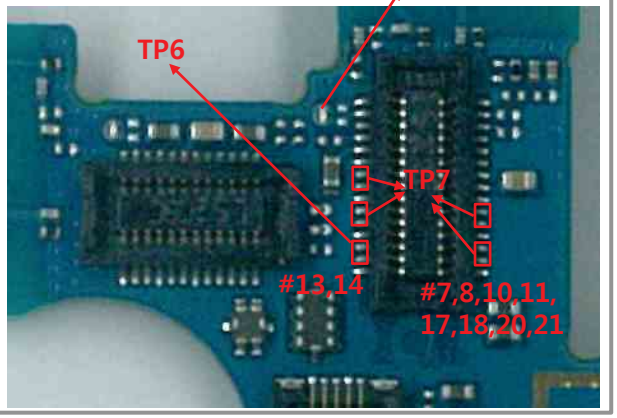

Copyright © 2015 LG Electronics. Inc. All right reserved. Only training and service purposes

3.15 Checking Main camera Block

8M camera control signals are generated by MT6732 (U2100 : Main Chipset). And powered by MT6325 (U4100 : PMIC).

Circuit Diagram

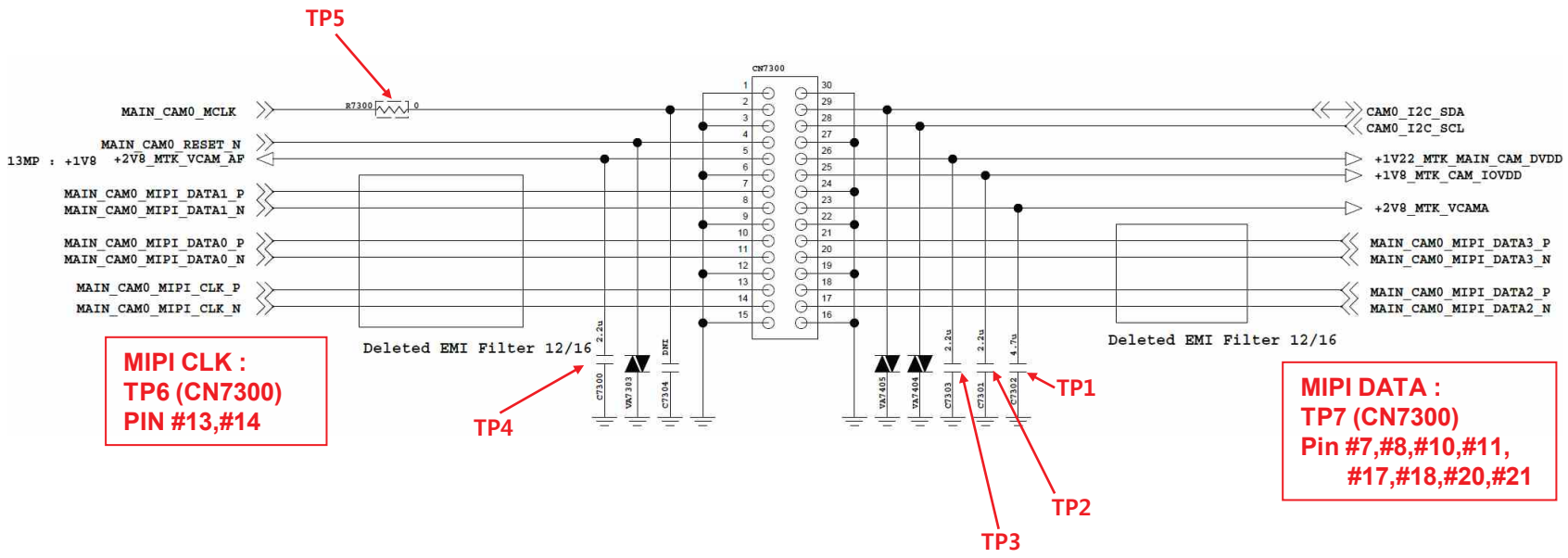

Copyright © 2015 LG Electronics. Inc. All right reserved. Only training and service purposes

3.15 Checking VT camera Block

5M camera control signals are generated by MT6732 (U2100 : Main Chipset). And powered by MT6325 (U4100 : PMIC).

Checking Flow	Image
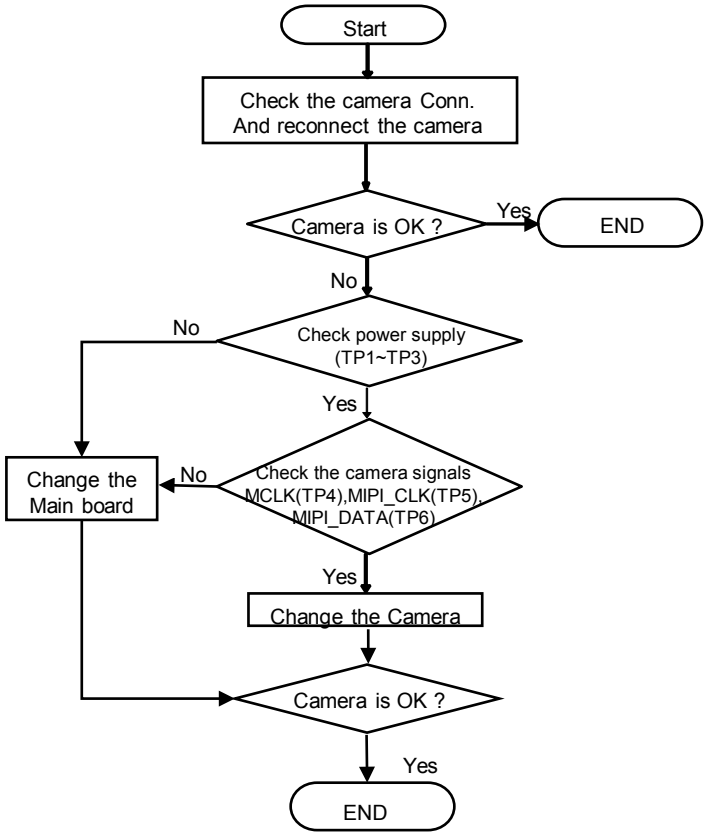	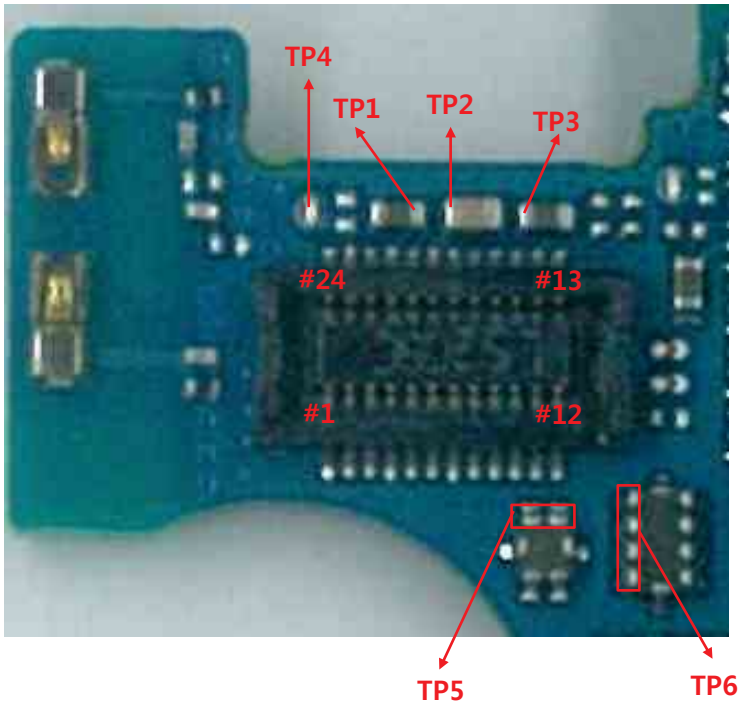

Copyright © 2015 LG Electronics. Inc. All right reserved. Only training and service purposes

3.15 Checking VT camera Block

5M camera control signals are generated by MT6732 (U2100 : Main Chipset). And powered by MT6325 (U4100 : PMIC).

Circuit Diagram

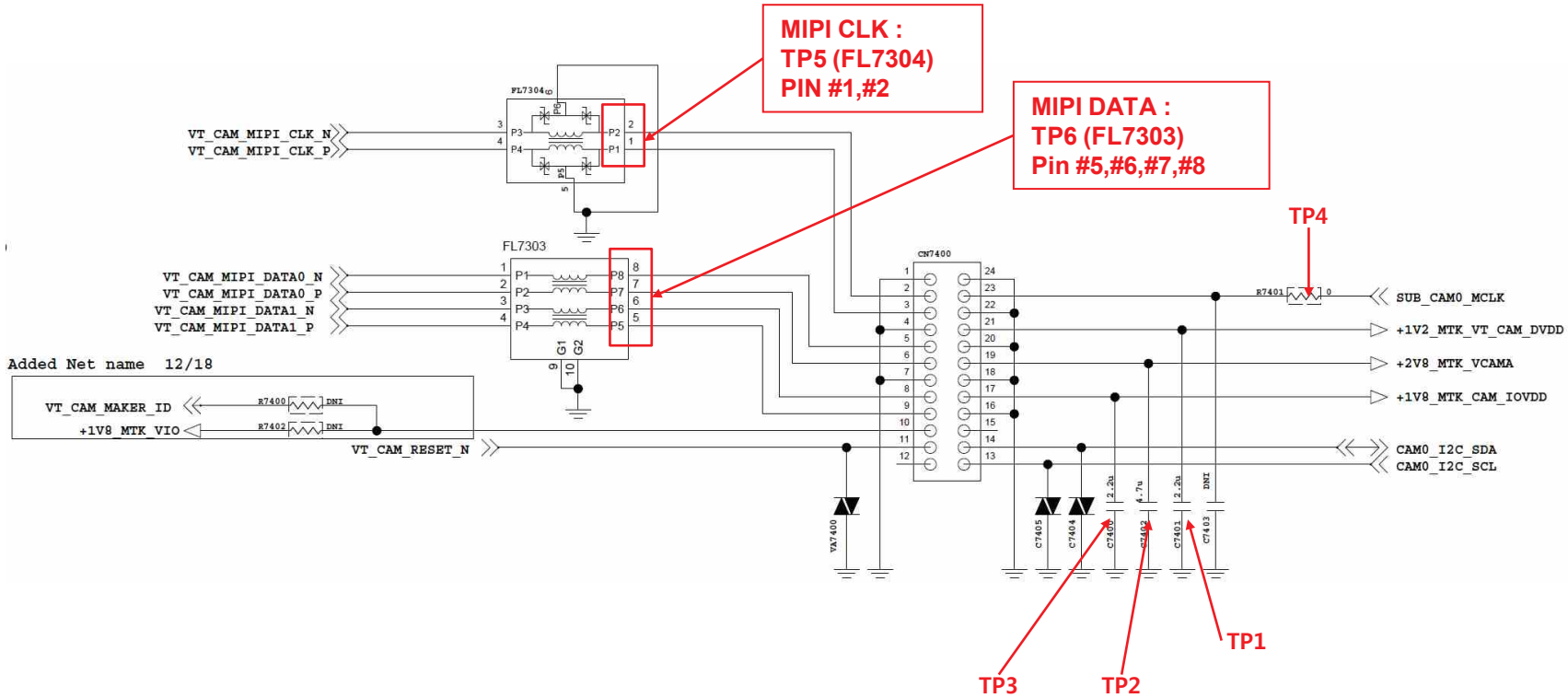

Copyright © 2015 LG Electronics. Inc. All right reserved. Only training and service purposes

3.16 Connectivity RF PART

3.16.1 Checking RF Signal TRX path(WiFi, BT)

Checking Flow

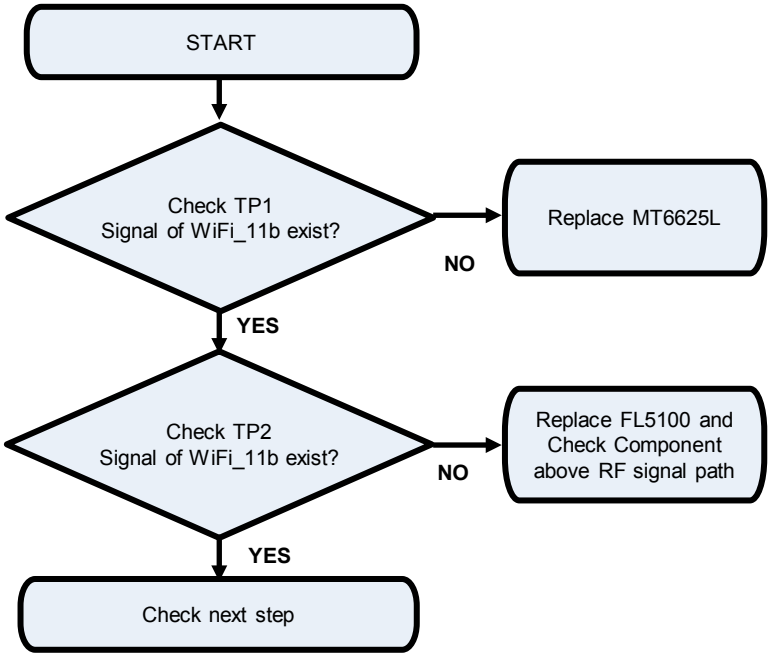

Image

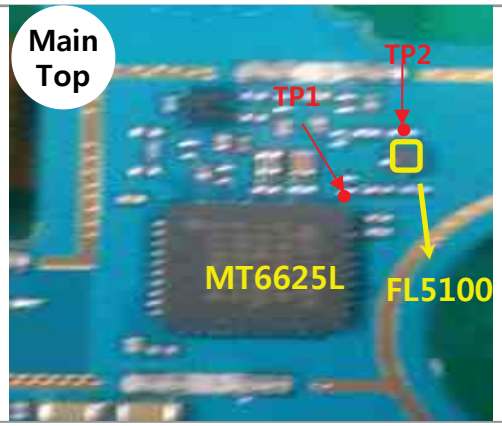

Circuit Diagram

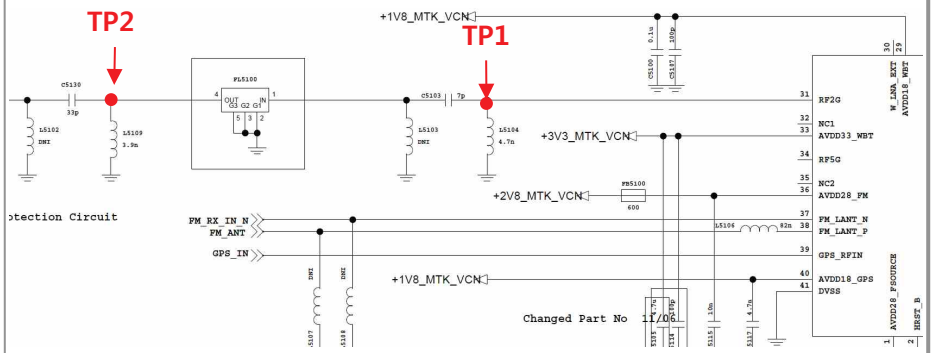

Copyright © 2015 LG Electronics. Inc. All right reserved. Only training and service purposes

3.16 Connectivity RF PART

3.16.2 Checking RF Signal TRX path(GPS)

Checking Flow

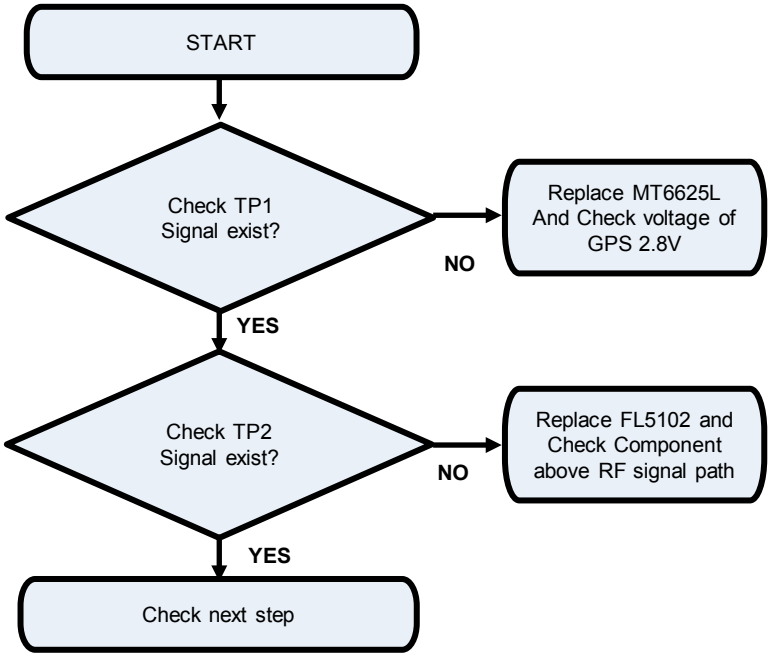

Image

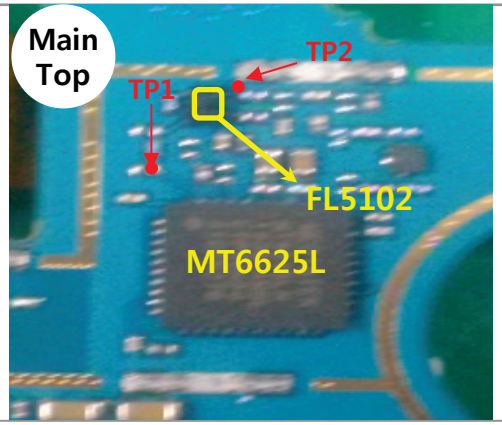

Circuit Diagram

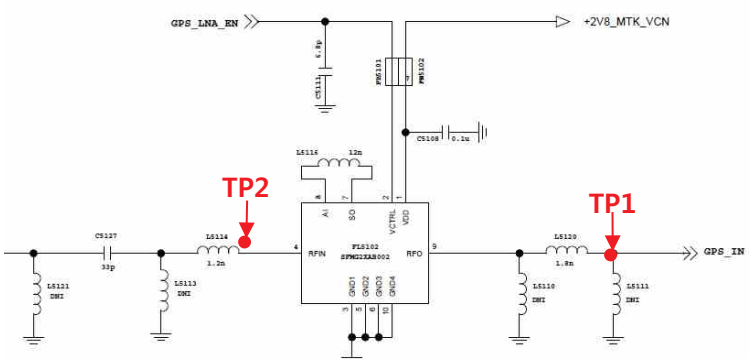

Copyright © 2015 LG Electronics. Inc. All right reserved. Only training and service purposes

3.16 Connectivity RF PART

3.16.3 The out put frequency(26MHz) of TCXO(X5100) is used as the reference of MT6625L(Connectivity-WLAN, GPS, BT)

Checking Flow

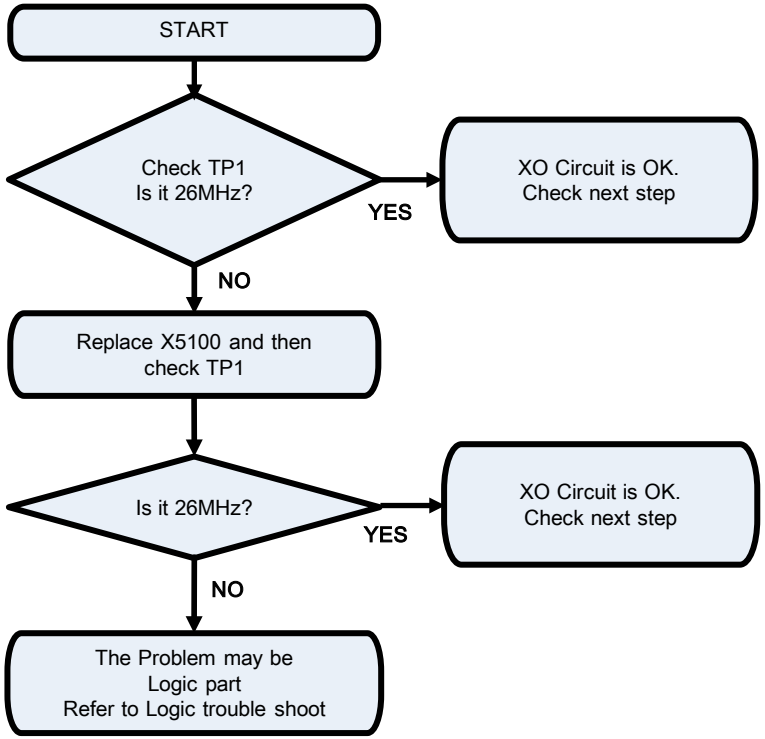

Image

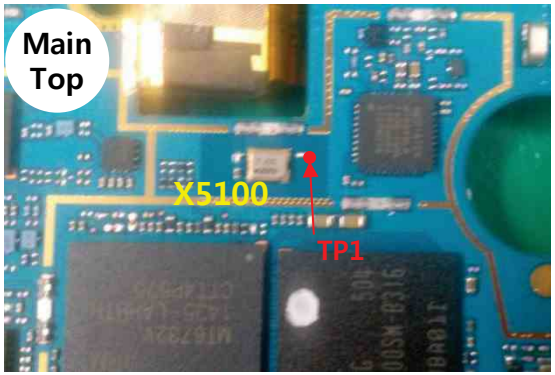

Circuit Diagram

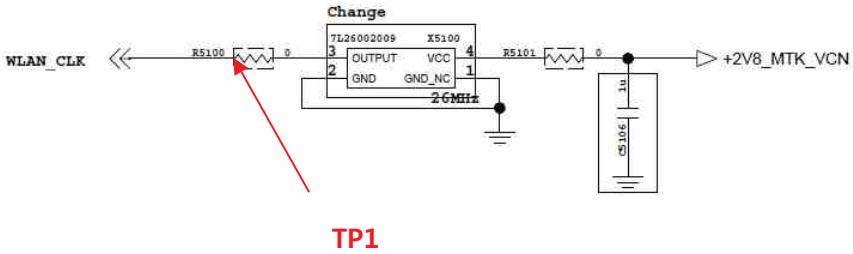

Copyright © 2015 LG Electronics. Inc. All right reserved. Only training and service purposes

1. Total block diagram

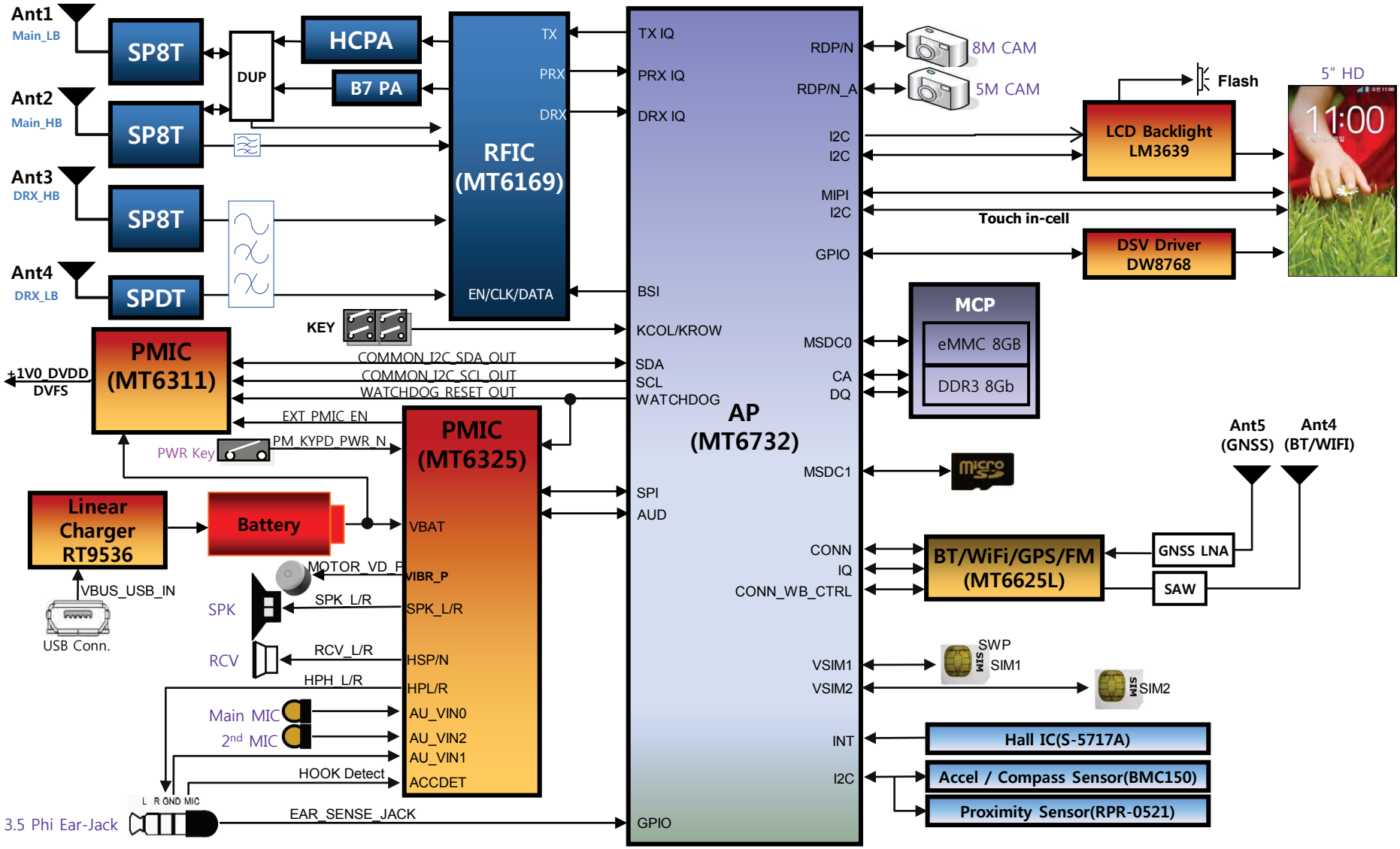

Copyright © 2015 LG Electronics. Inc. All right reserved. Only training and service purposes

2. RF Main

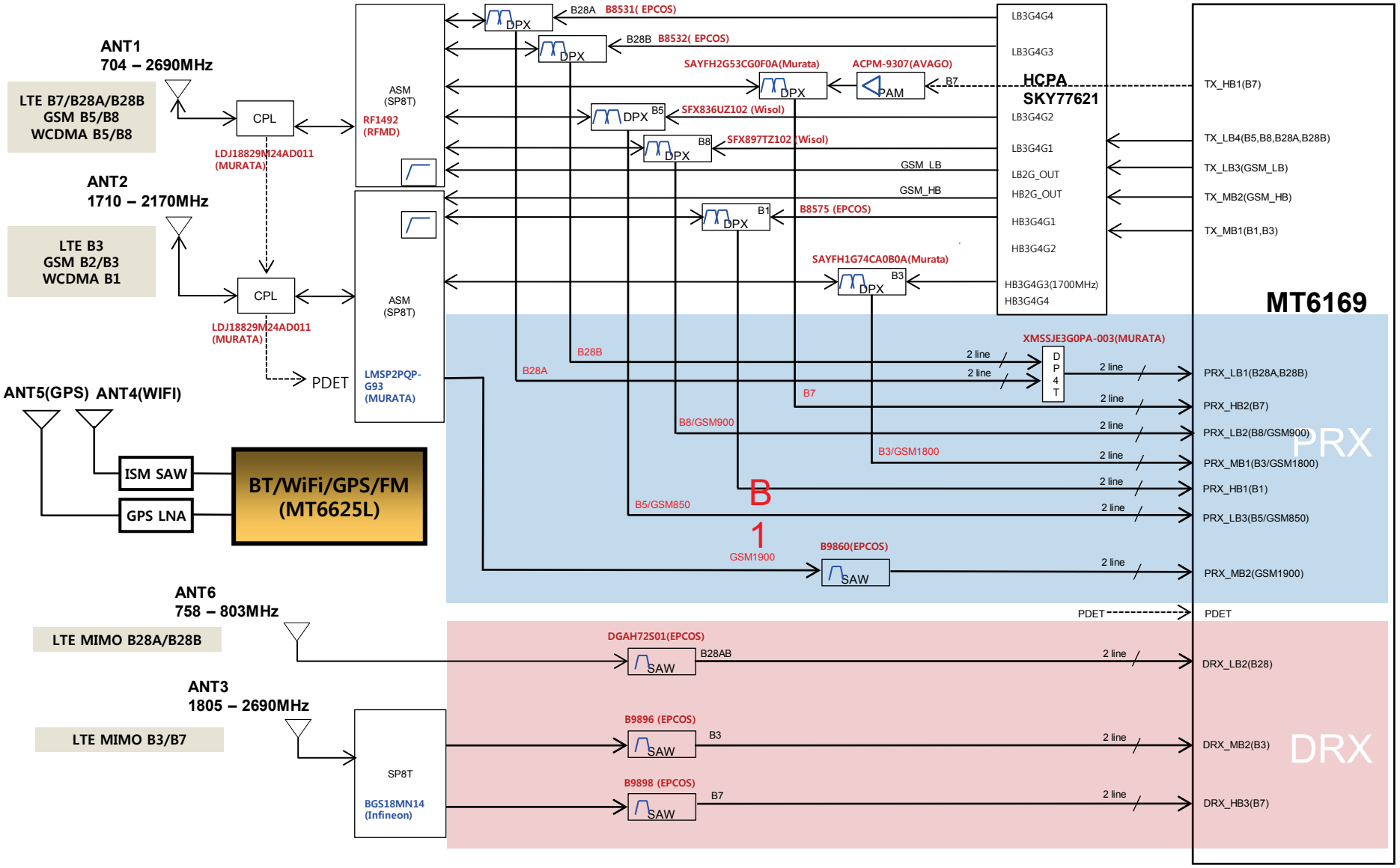

Copyright © 2015 LG Electronics. Inc. All right reserved. Only training and service purposes

3. Power block diagram

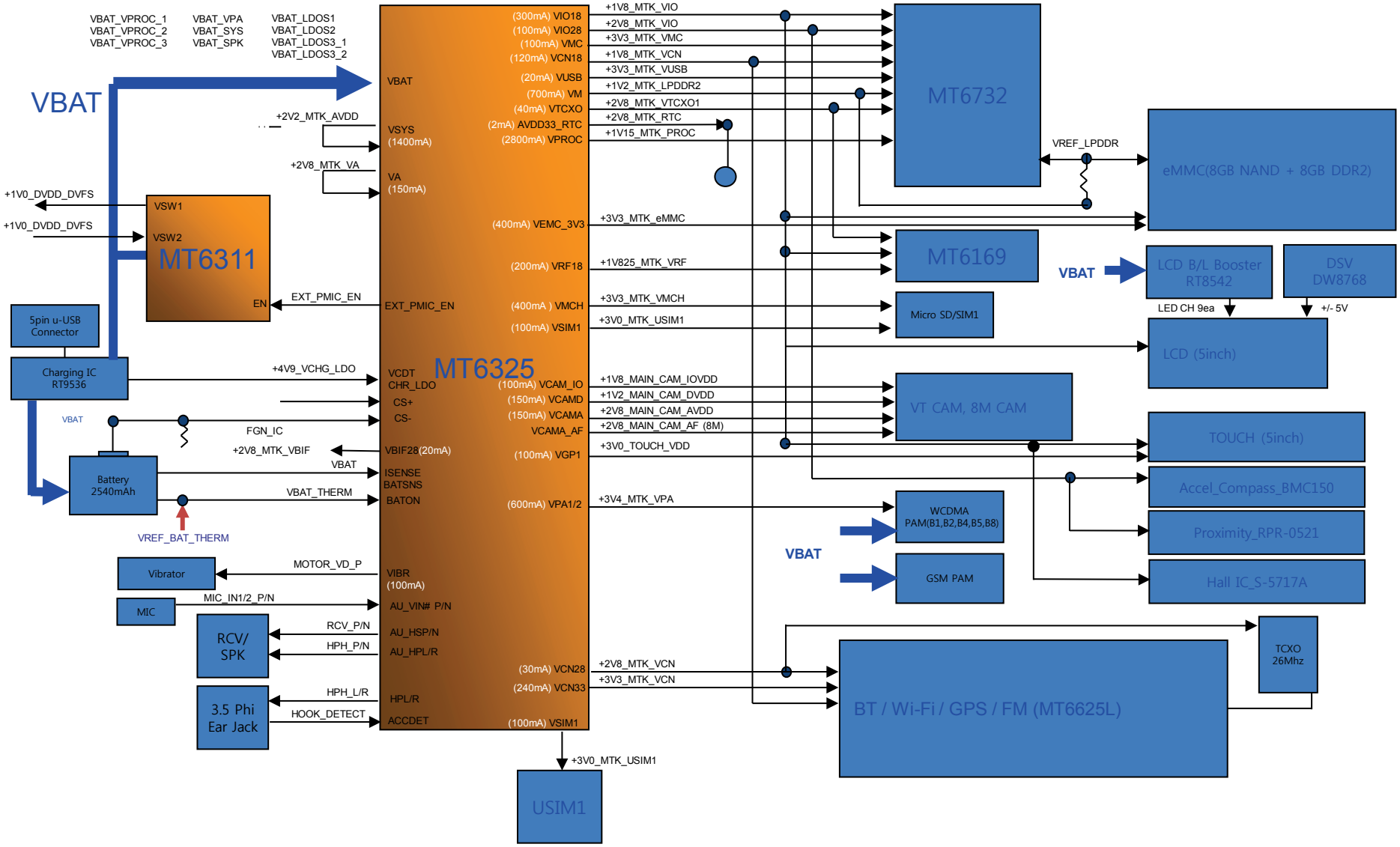

Copyright © 2015 LG Electronics. Inc. All right reserved. Only training and service purposes

4. Memory / USIM / Micro SD Combo

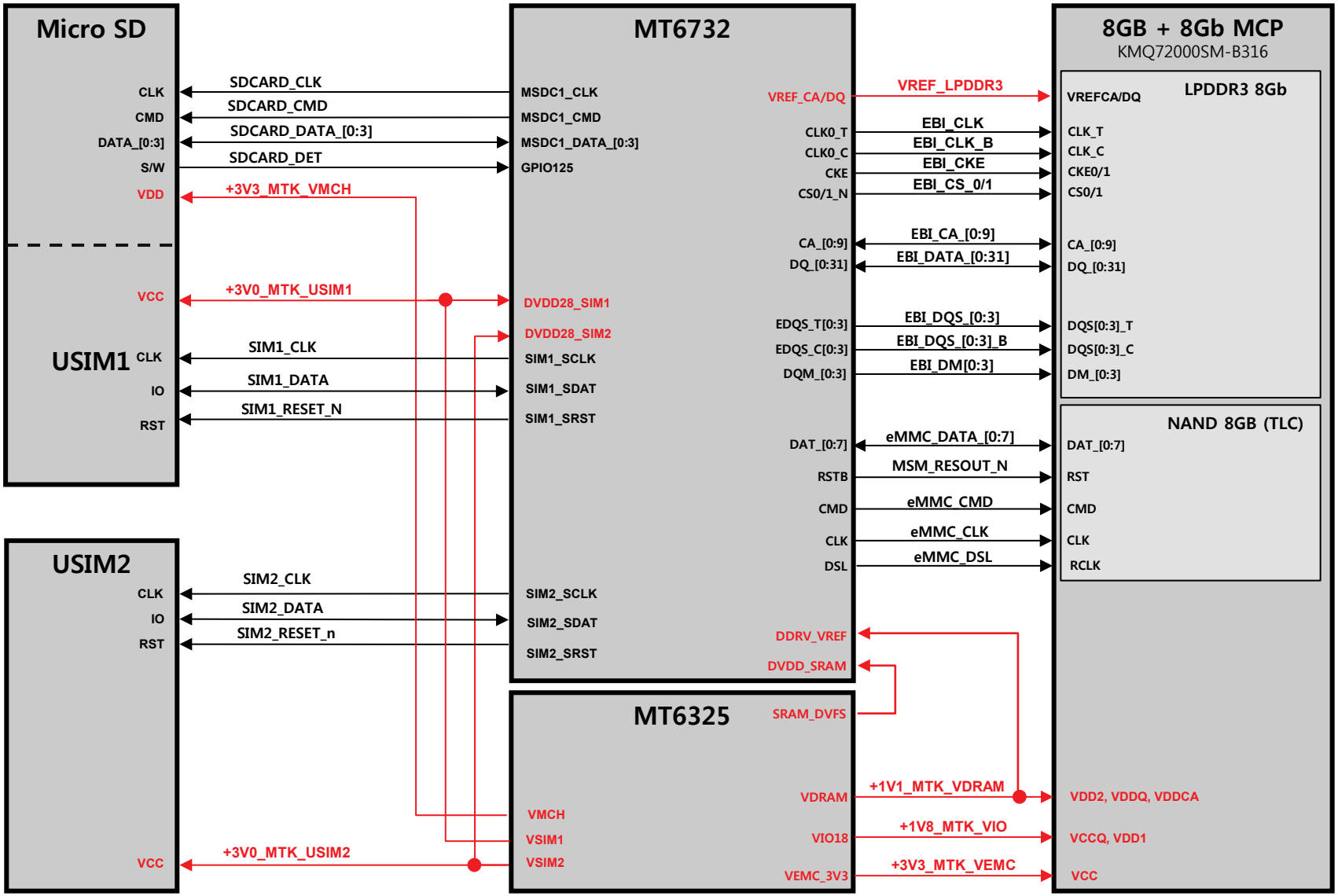

Copyright © 2015 LG Electronics. Inc. All right reserved. Only training and service purposes

5. LCD(INCELL TOUCH)

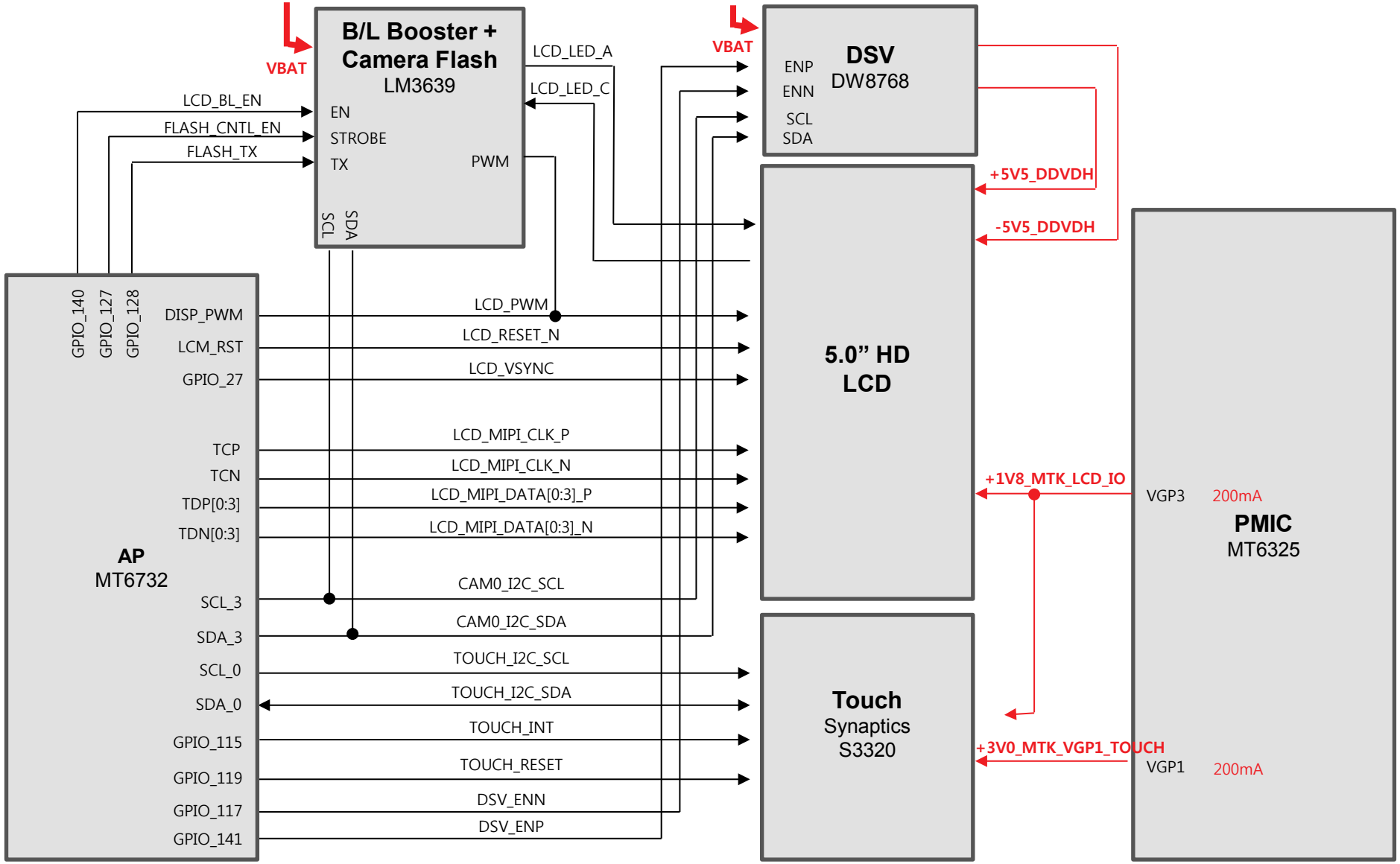

Copyright © 2015 LG Electronics. Inc. All right reserved. Only training and service purposes

6. Camera

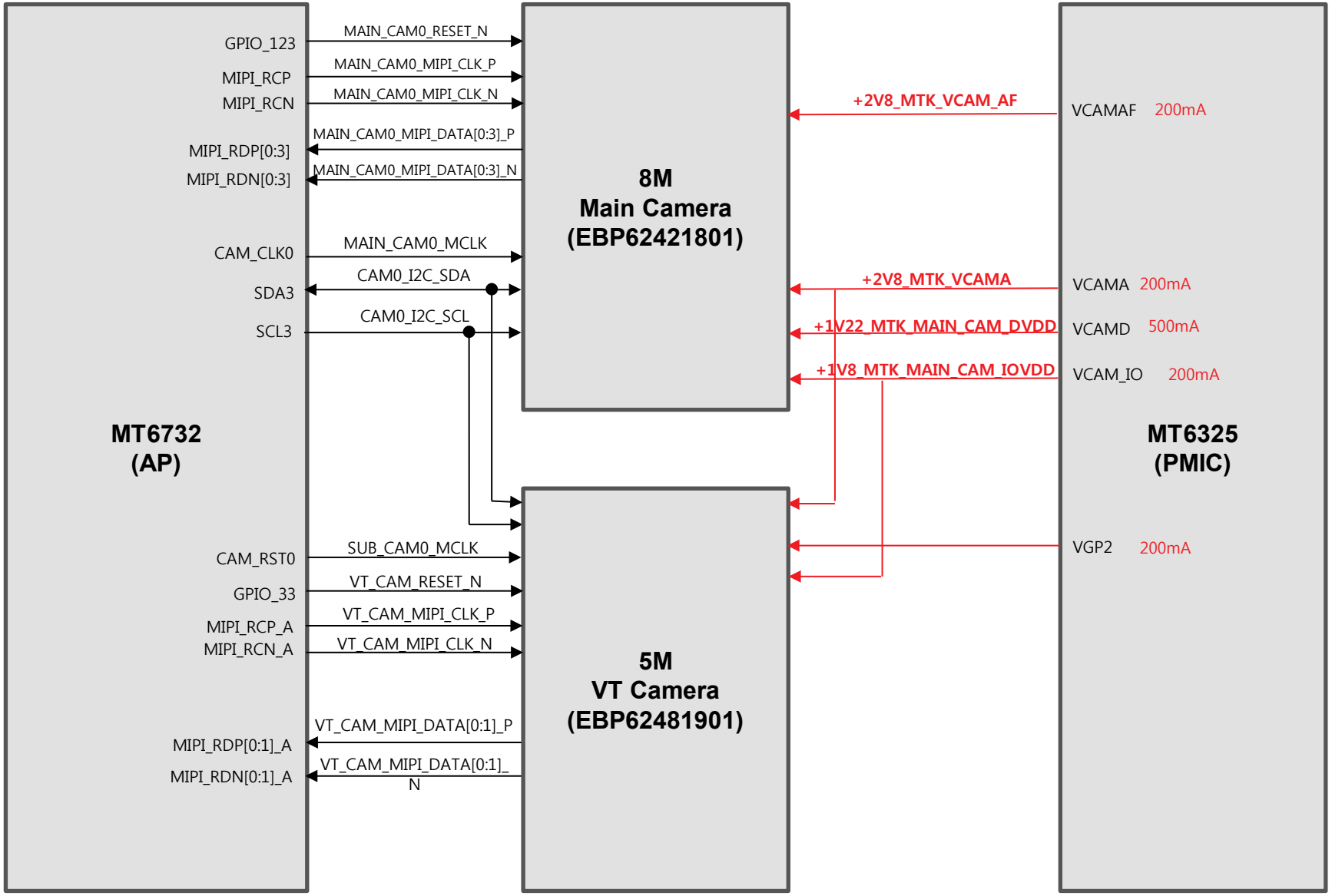

Copyright © 2015 LG Electronics. Inc. All right reserved. Only training and service purposes

7. AUDIO

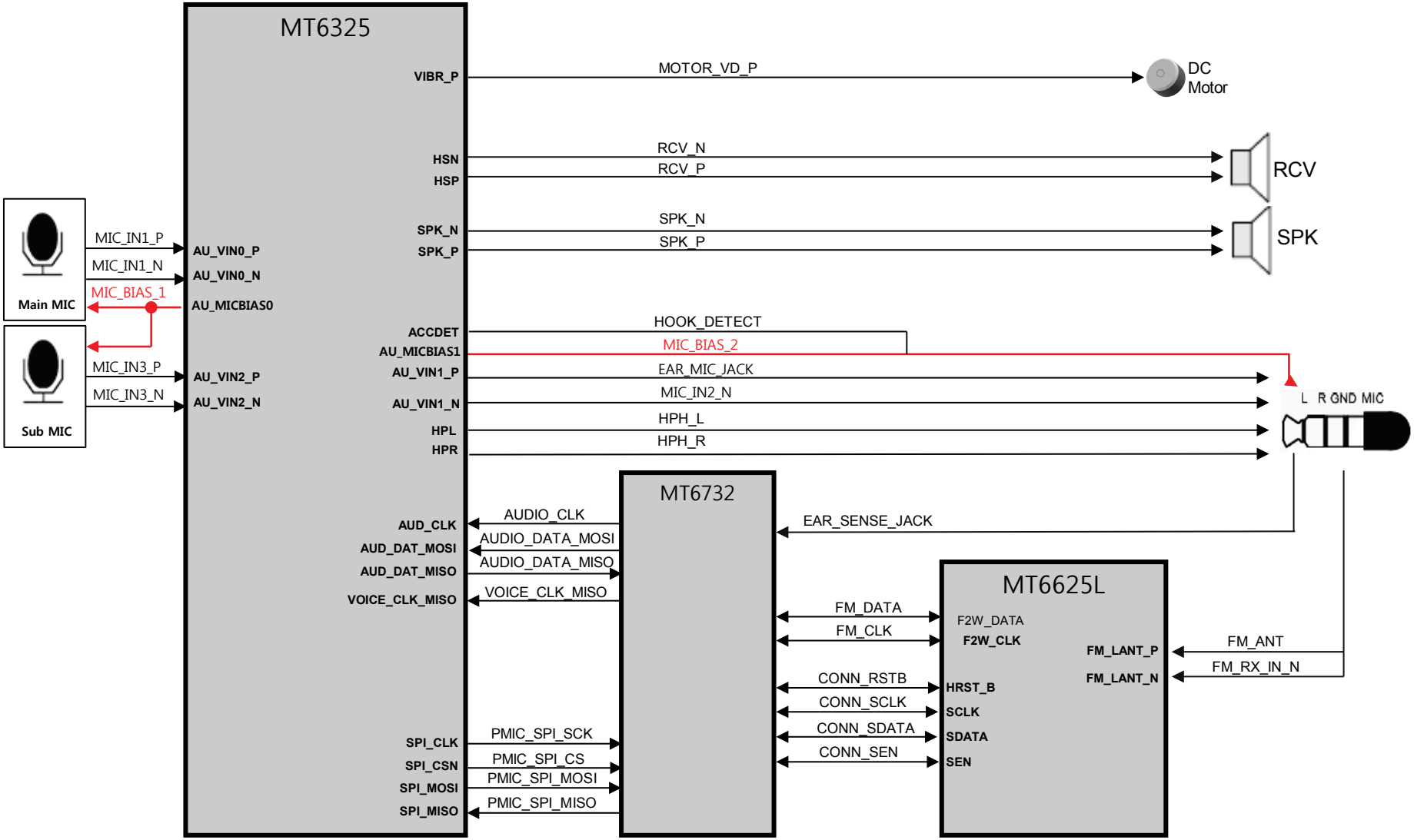

Copyright © 2015 LG Electronics. Inc. All right reserved. Only training and service purposes

8. Connectivity (BT / WIFI / GPS / FM RADIO)

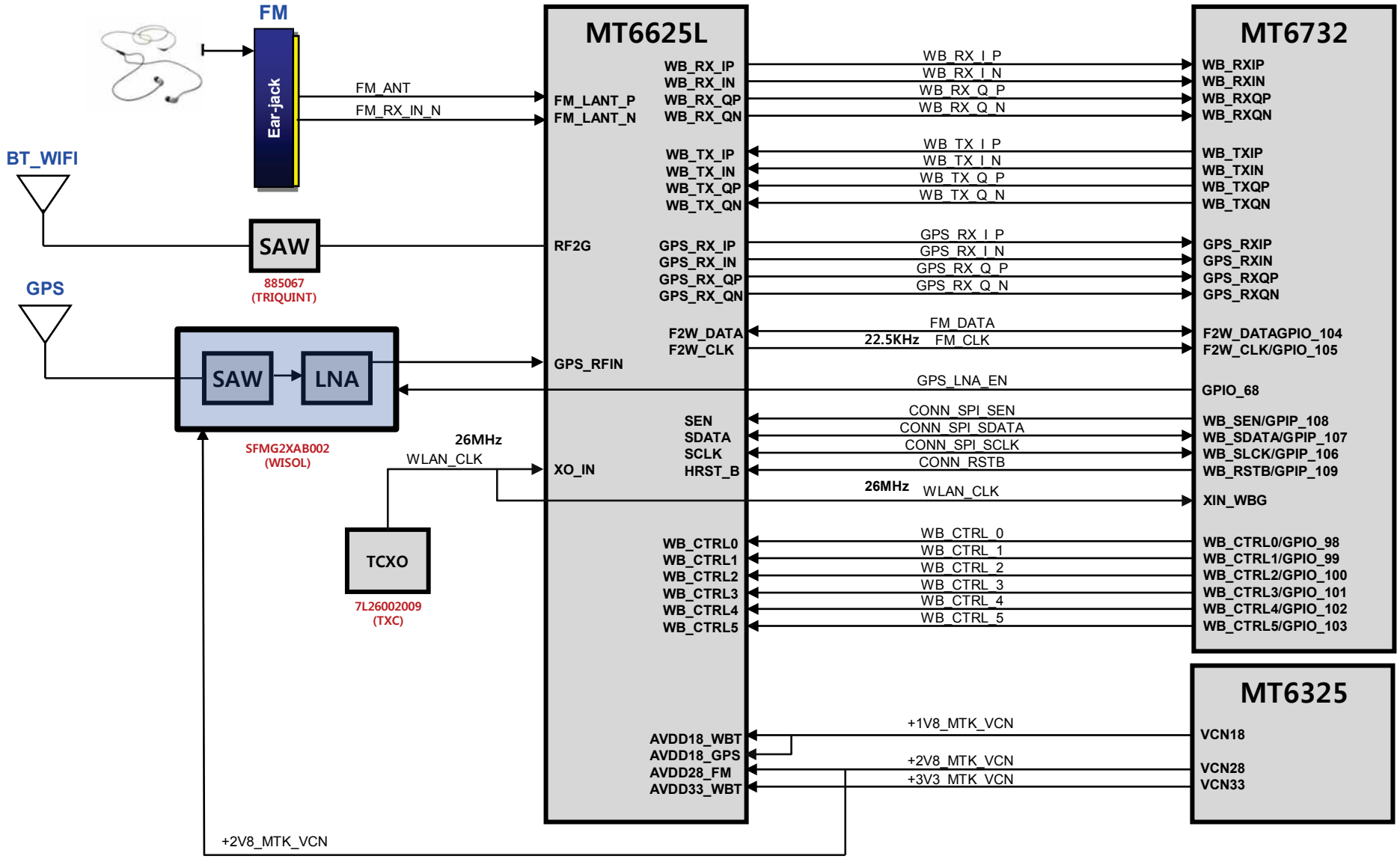

Copyright © 2015 LG Electronics. Inc. All right reserved. Only training and service purposes

9. Sensors

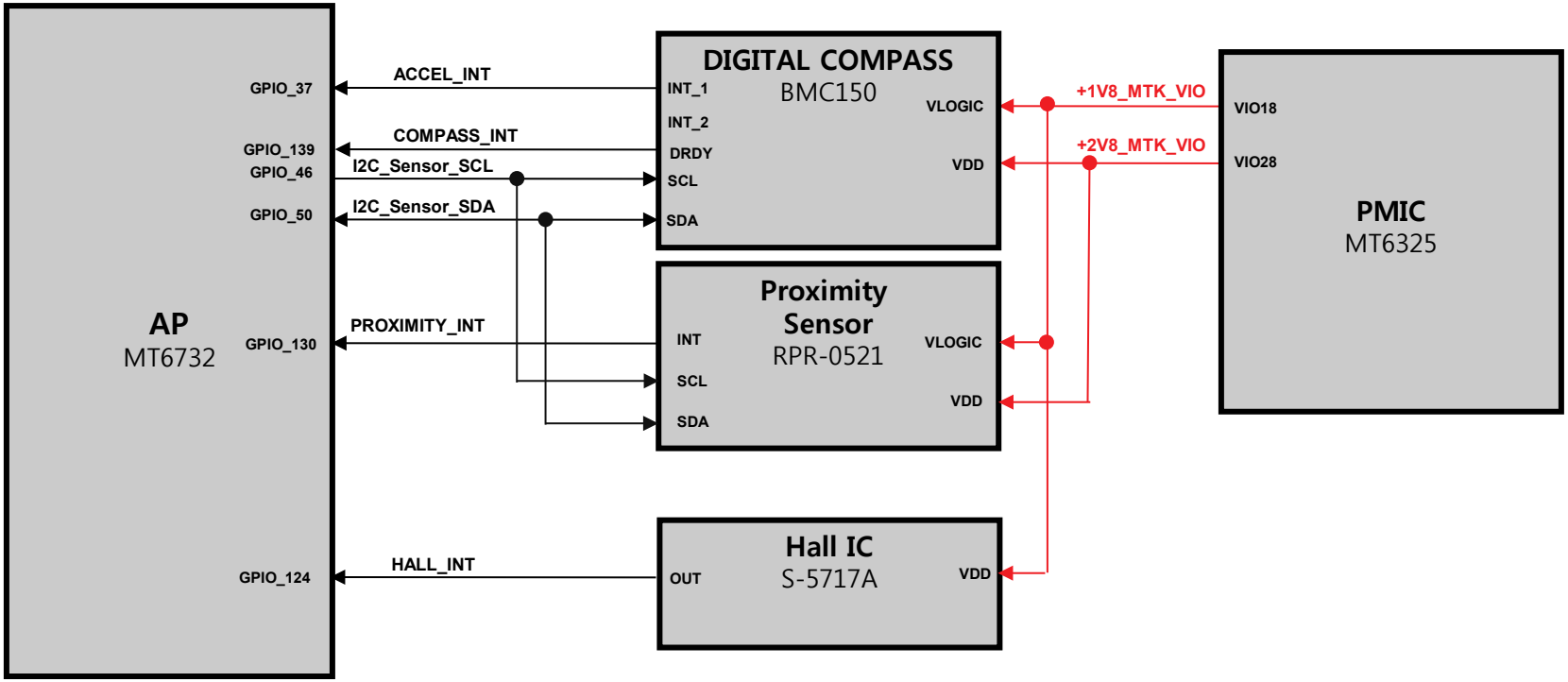

Copyright © 2015 LG Electronics. Inc. All right reserved. Only training and service purposes

CIRCUIT DIAGRAM

Copyright © 2015 LG Electronics. Inc. All right reserved. Only training and service purposes

Rev_1.0

ANT1 (G850/900, W_B5/B8, LTE_B7/B28A/B28B)

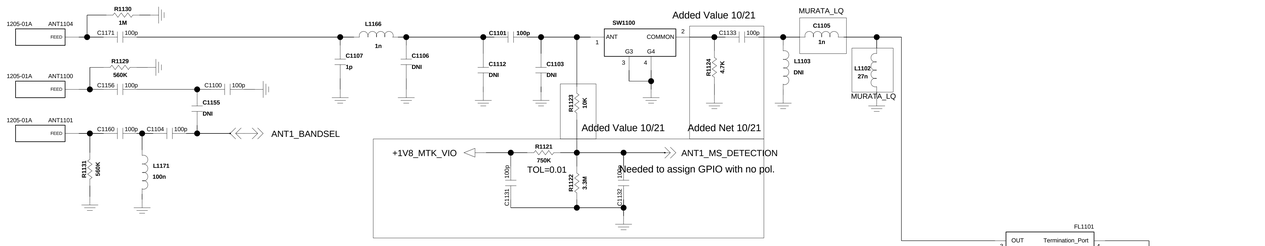

ANT2 (G1800/1900, W_B1, LTE_B3)

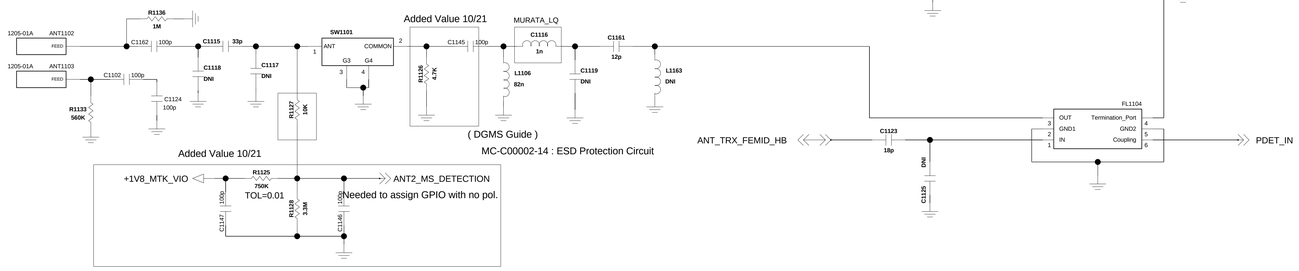

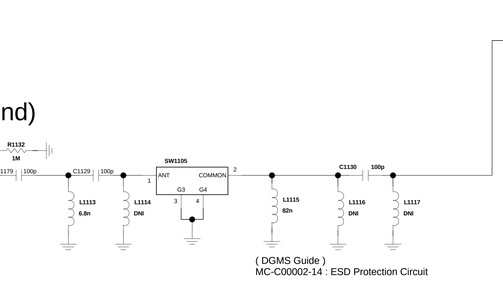

ANT3 (B3,B7 2nd)

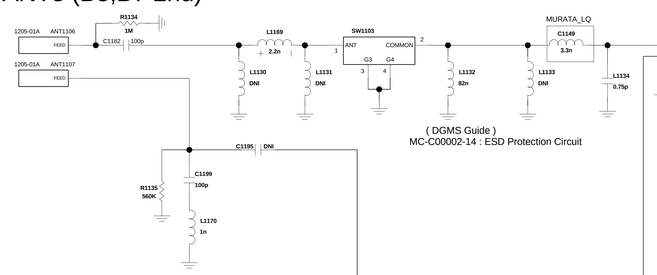

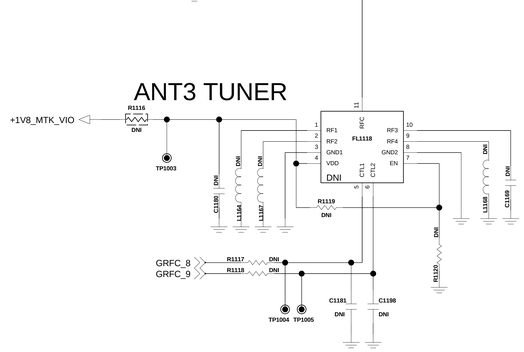

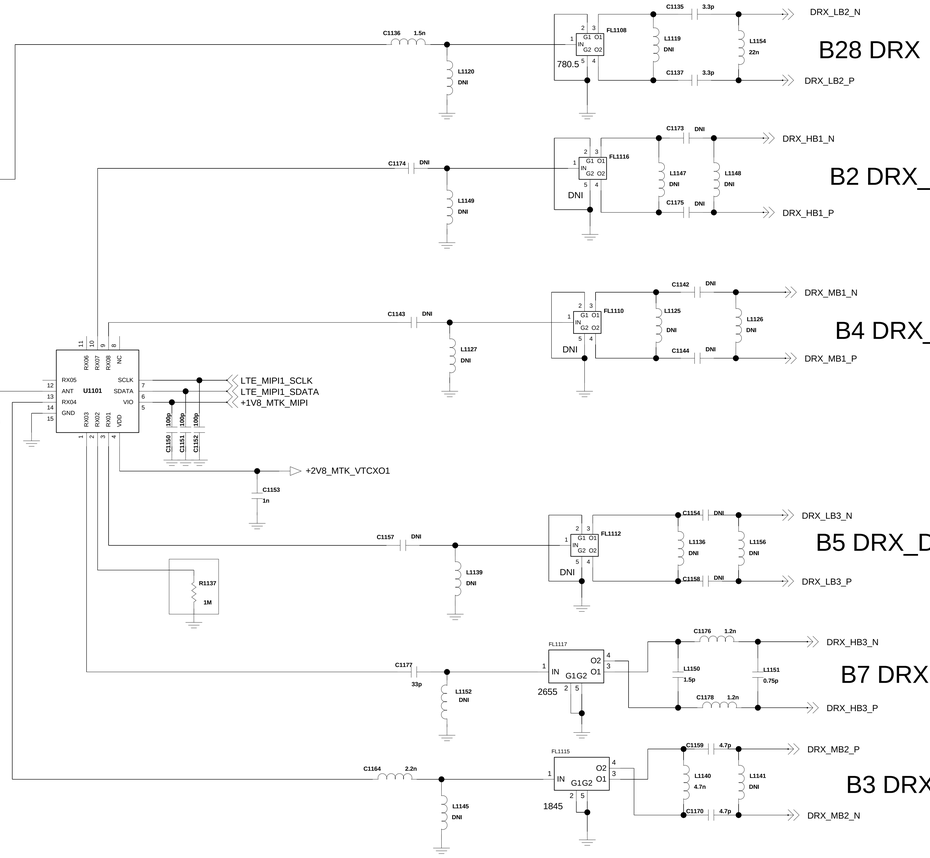

LGE Internal Use Only

LG Electronics			
TITLE: LG-H522y			
SIZE: A2	DWG NO: PDM NUMBER		REV: Rev
Drawn by: User Name	SHEET 1 OF 1	Date: Drawing Date	

< 1-x-2-1_ASM >

Rev_1.0

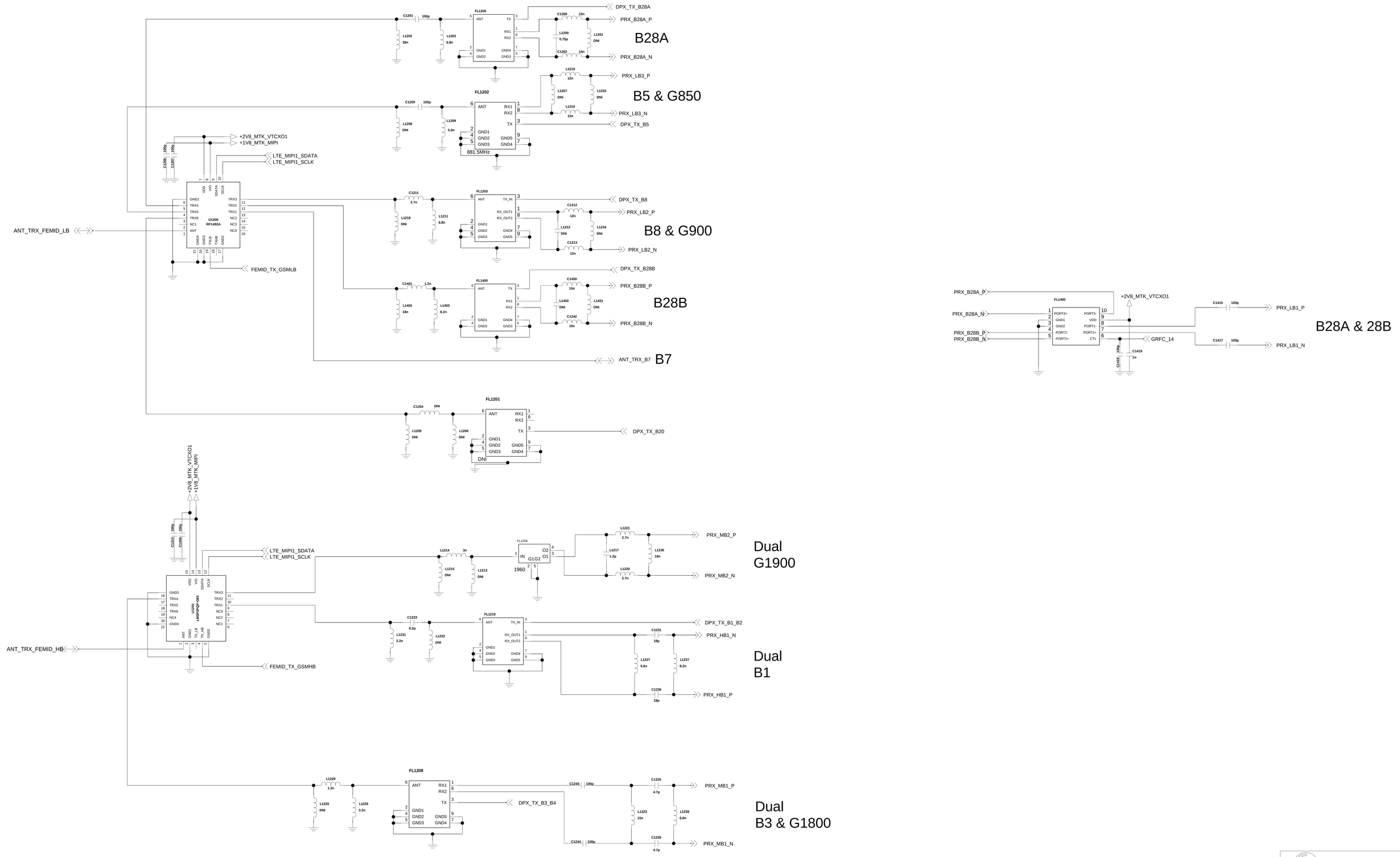

LGE Internal Use Only

LG Electronics	
TITLE	LG-H522y
SIZE A2	DWG NO PDM NUMBER
REV Rev	
Drawn by User Name	SHEET 1 of 1
Date Drawing Date	

<1-6-3-1_HCPA_SKY77621>

Rev_0.3

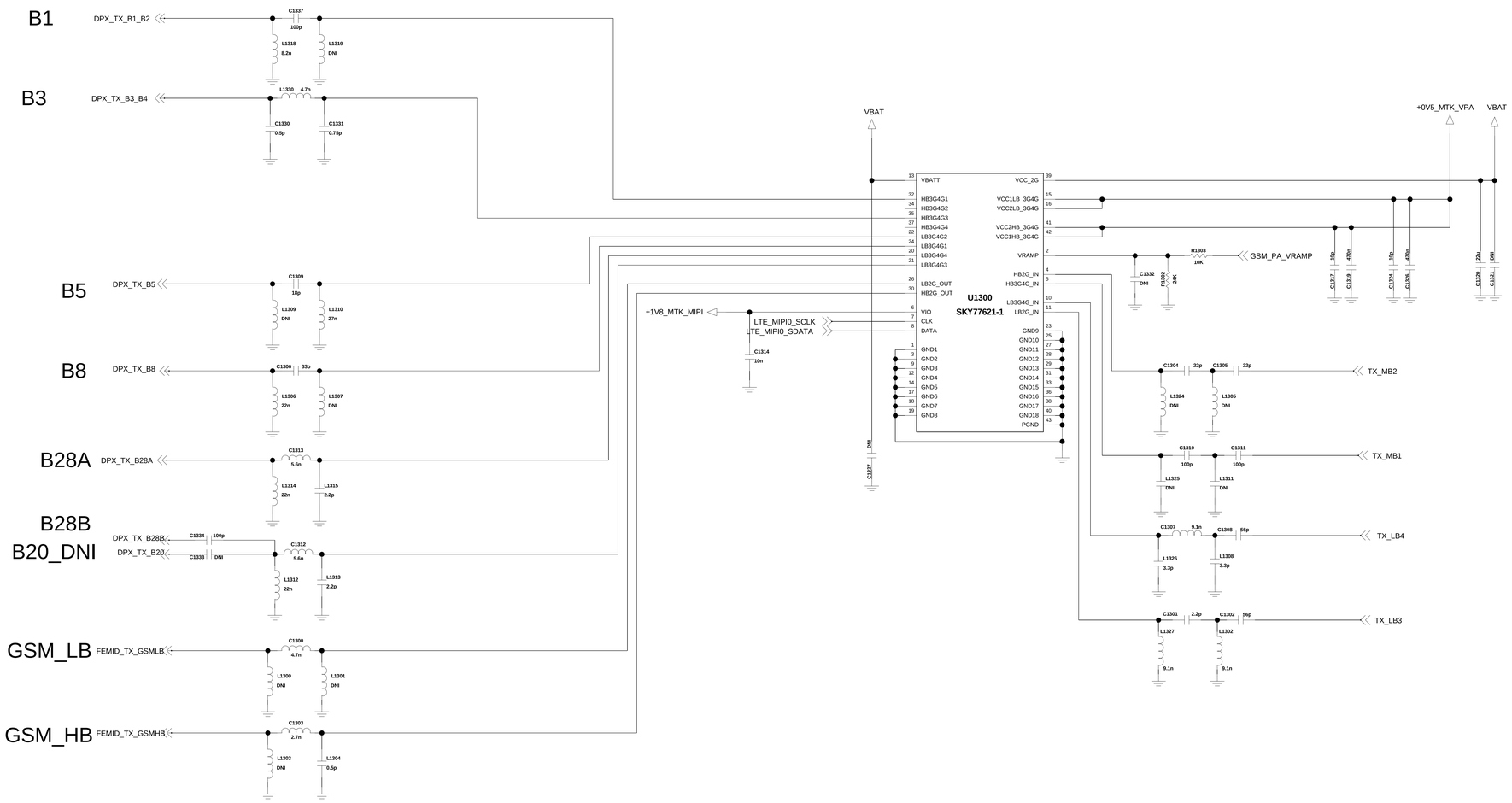

LGE Internal Use Only

LG Electronics			
TITLE	LG-H522y		
SIZE A2	DWG NO PDM NUMBER		REV Rev
DRAWN BY User Name	SHEET 1 of 1	Date Drawing Date	

<1-9-5-1_RFIC_MT6169>

Rev_0.4

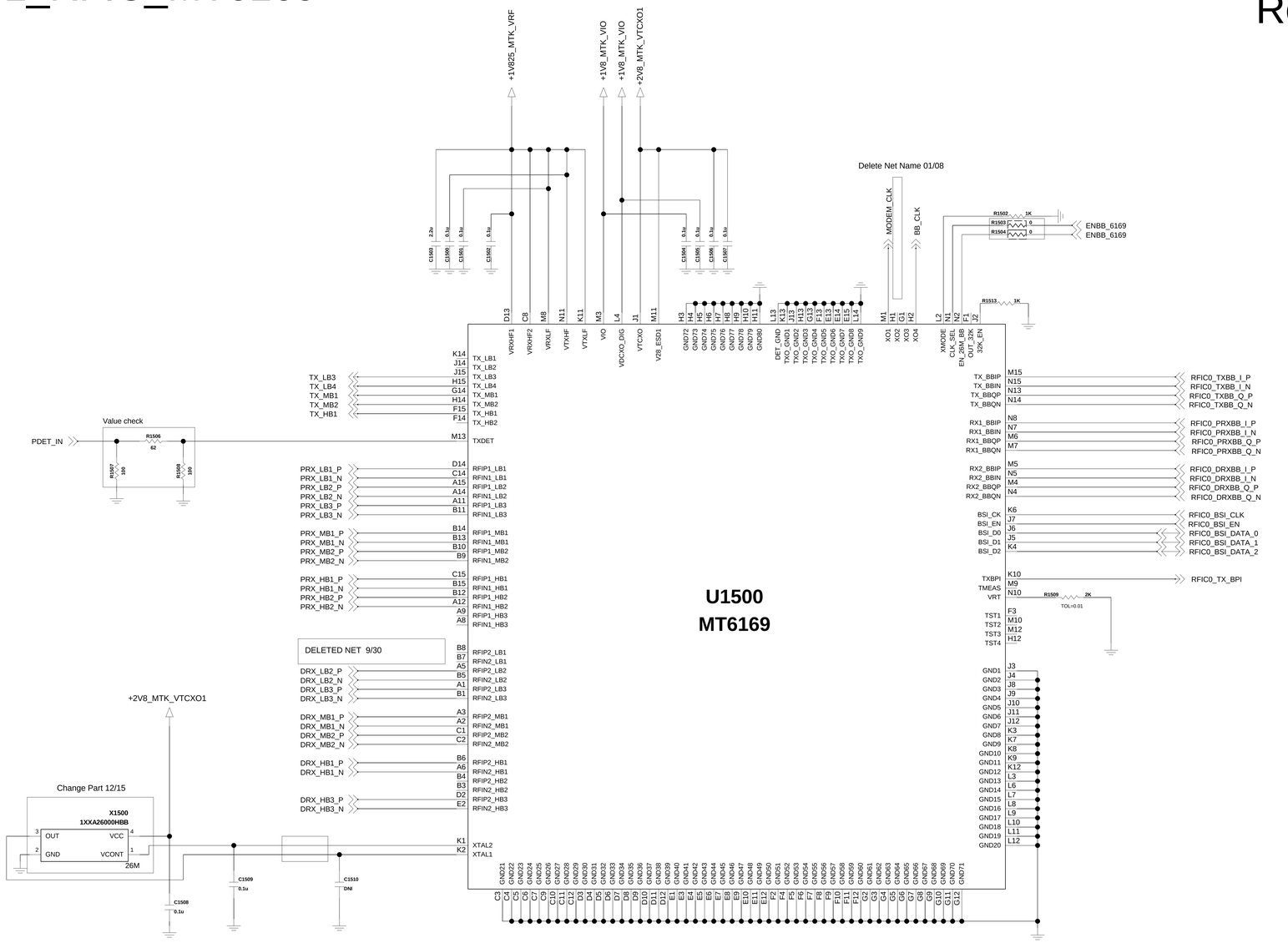

LG Electronics	
TITLE	LG-H522y
SIZE A2	DWG NO PDM NUMBER
REV Rev	
DRAWN BY User Name	SHEET 1 WTR1605L OF 20
Date Drawing Date	

< 1-2-6-1_B7 >

Rev_0.4

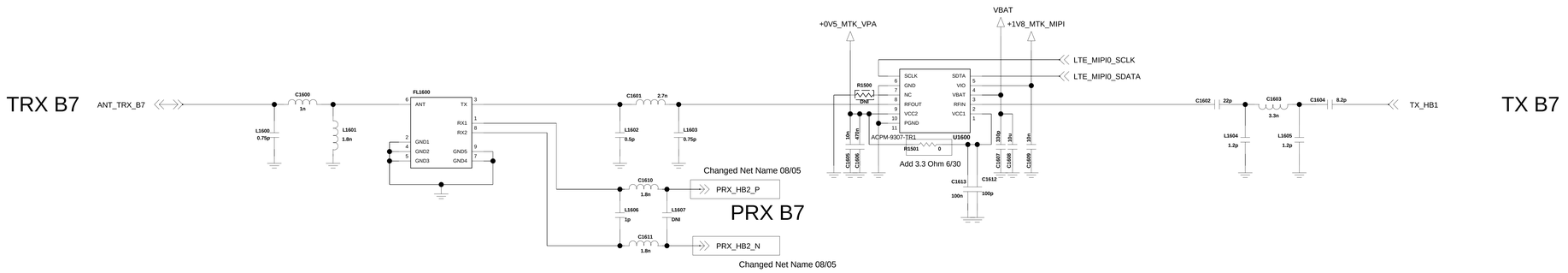

LGE Internal Use Only

	LG Electronics
TITLE	LG-H522y
SIZE A2	DWG NO PDM NUMBER
	REV Rev
DRAWN BY User Name	SHEET 1 OF 1
	Date Drawing Date

< 2-3-5-1-1_MT6732_DATA>

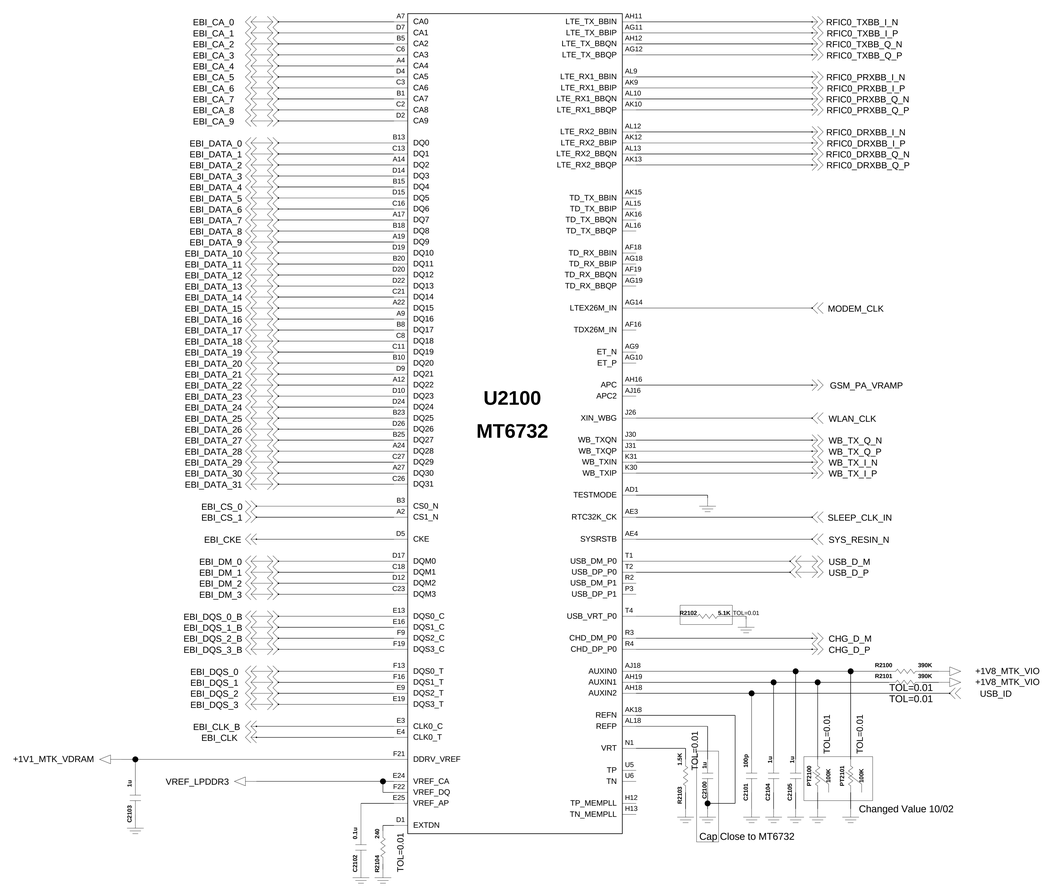

PCB REVISION_GPIO

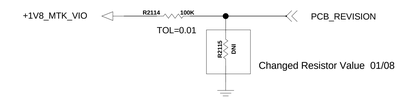

Revision	R2114	R2115	Level
0	100K	20K	0.300
A - Front 5M CAM	100K	27K	0.383
B	100K	39K	0.505
C	100K	51K	0.680
1.0	100K	DNI	1.800
1.1	DNI	100K	0.000

< 9-3-1_JTAG > Rev_0.4

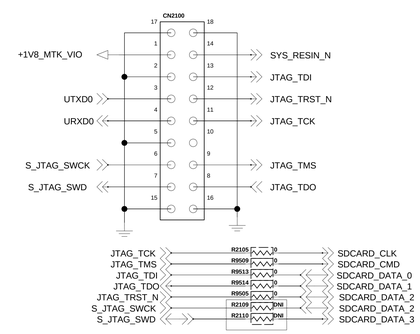

LGE Internal Use Only

LG Electronics

TITLE LG-H522y

SIZE A2 | DWG NO PDM NUMBER | REV Rev

DRAWN BY User Name | SHEET 2-1-1_MSM8974_DATA | DATE Drawing Date

< 2-3-5-1-2_MT6732_GPIO >

I2C Pull-Up

Changed 12/15

I2C_0 : Touch — +1V8_MTK_LCD_IO — R2200 4.7K, R2201 4.7K — TOUCH_I2C_SDA, TOUCH_I2C_SCL

I2C_1 : Sensors, NFC, Audio Sub System, LED DRIVER — +1V8_MTK_VIO — R2202 4.7K, R2203 4.7K — SENSOR0_I2C_SDA, SENSOR0_I2C_SCL

I2C_3 : Main CAM, VT CAM, B/L Booster, L/D — +1V8_MTK_VIO — R2206 4.7K, R2207 4.7K — CAM0_I2C_SDA, CAM0_I2C_SCL

Deleted 11/6

Connected JTAG : R2212, R2213 - 4.7K — AUDIO_DATA_MOSI, PMIC_SPI_CS — R2213 DNI, R2212 DNI, R2214 DNI, R2215 0 — +1V8_MTK_VIO

PCB_INDICATOR_0 — R2222 10K, R2223 DNI — +1V8_MTK_VIO
PCB_INDICATOR_1 — R2224 DNI, R2225 10K
PCB_INDICATOR_2 — R2226 10K, R2227 DNI
PCB_INDICATOR_3 — R2228 10K, R2229 DNI

F — R2204 10K, R2205 DNI
G — R2210 DNI
AR — R2211 DNI
Y — R2216 DNI
V

Change 01/08

U2100
MT6732

Pin	Signal	Net
A29	GPIO_0/MSDC0_CLK	eMMC_CLK (R3301 0)
B31	GPIO_1/MSDC0_CMD	eMMC_CMD
B28	GPIO_2/MSDC0_DAT0	eMMC_DATA_0
B29	GPIO_3/MSDC0_DAT1	eMMC_DATA_1
D29	GPIO_4/MSDC0_DAT2	eMMC_DATA_2
C30	GPIO_5/MSDC0_DAT3	eMMC_DATA_3
D28	GPIO_6/MSDC0_DAT4	eMMC_DATA_4
C29	GPIO_7/MSDC0_DAT5	eMMC_DATA_5
B30	GPIO_8/MSDC0_DAT6	eMMC_DATA_6
D30	GPIO_9/MSDC0_DAT7	eMMC_DATA_7
E28	GPIO_10/MSDC0_RSTB	MSM_RESOUT_N
A30	GPIO_11/MSDC0_DSL	eMMC_DSL
G1	GPIO_12/MSDC1_CLK/MD32_JTAG_TCK	SDCARD_CLK (TP2203)
H4	GPIO_13/MSDC1_CMD/MD32_JTAG_TMS	SDCARD_CMD
H3	GPIO_14/MSDC1_DAT0/MD32_JTAG_TDI	SDCARD_DATA_0
G4	GPIO_15/MSDC1_DAT1/MD32_JTAG_TDO	SDCARD_DATA_1
H2	GPIO_16/MSDC1_DAT2/MD32_JTAG_TRST	SDCARD_DATA_2
G2	GPIO_17/MSDC1_DAT3	SDCARD_DATA_3
J1	GPIO_18/MD1_SIM1_SCLK/MD2_SIM1_SCLK/MD1_SIM2_SCLK	SIM1_CLK
J5	GPIO_19/MD1_SIM1_SRST/MD2_SIM1_SRST/MD1_SIM2_SRST	SIM1_RESET_N
J4	GPIO_20/MD1_SIM1_SIO/MD2_SIM1_SDAT/MD1_SIM2_SIO	SIM1_DATA
W3	GPIO_21/MD1_SIM2_SCLK/MD2_SIM2_SCLK/MD1_SIM1_SCLK	SIM2_CLK
W4	GPIO_22/MD1_SIM2_SRST/MD2_SIM2_SRST/MD1_SIM1_SRST	SIM2_RESET_N
W2	GPIO_23/MD1_SIM2_SIO/MD2_SIM2_SDAT/MD1_SIM1_SIO	SIM2_DATA
AC2	GPIO_24/AUD_CLK_MOSI	AUDIO_CLK
AB2	GPIO_25/AUD_DAT_MISO/VOW_DAT_MISO/AUD_DAT_MOSI	AUDIO_DATA_MISO
AB1	GPIO_26/AUD_DAT_MOSI/VOW_DAT_MISO/AUD_DAT_MISO	AUDIO_DATA_MOSI
AB3	GPIO_38/PWRAP_SPI0_CK	PMIC_SPI_SCK
AD5	GPIO_39/PWRAP_SPI0_CSN	PMIC_SPI_CS
AC5	GPIO_40/PWRAP_SPI0_MI/PWRAP_SPI0_MO	PMIC_SPI_MISO
AB5	GPIO_41/PWRAP_SPI0_MO/PWRAP_SPI0_MI	PMIC_SPI_MOSI
AD2	GPIO_42/WATCHDOG	WATCHDOG_RESET_OUT
Y2	GPIO_43/SRCLKENA0	SR_CLK_EN_0
AA2	GPIO_44/SRCLKENA1	SR_CLK_EN_1
AG1	GPIO_27/DISP_PWM	LCD_VSYNC (R2209 DNI) — Changed Net name 02/09
AE2	GPIO_28/LCM_RST	LCD_RESET_N
AE1	GPIO_29/DSI_TE	LCD_VSYNC
AC26	GPIO_30/CAM_CLK0/TDD_TCK	MAIN_CAM0_MCLK
AD28	GPIO_31/CAM_RST0/TDD_TMS	SUB_CAM0_MCLK
AD27	GPIO_32/CAM_RST1/PWM_C/AGPS_SYNC/TDD_TDI	CHG_EN_SET
AD29	GPIO_33/CAM_PDN0/UCTS2/UCTS3/TDD_TDO	VT_CAM_RESET_N
AC30	GPIO_34/CAM_PDN1/URTS2/URTS3/TDD_TRSTN (TP2204)	
AC27	GPIO_35/CMPCLK/CMCSK/TDD_TXD	CHARGER_IRQ_B
AC29	GPIO_36/CMDAT0/CMCSD0/PTA_RXD	EAR_SENSE_JACK
AC28	GPIO_37/CMDAT1/CMCSD1/PTA_TXD	ACCEL_INT
T30	GPIO_45/SCL0	TOUCH_I2C_SCL
R30	GPIO_49/SDA0	TOUCH_I2C_SDA
R28	GPIO_46/SCL1	SENSOR0_I2C_SCL
R29	GPIO_50/SDA1	SENSOR0_I2C_SDA
R26	GPIO_47/SCL2/SCL3_1	COMMON_I2C_SCL
R27	GPIO_51/SDA2/SDA3_1	COMMON_I2C_SDA
T27	GPIO_48/SCL3/SCL2_1	CAM0_I2C_SCL
T28	GPIO_52/SDA3/SDA2_1	CAM0_I2C_SDA
AK22	GPIO_53/RFIC0_BSI_EN/MD2_BSI_EN	RFIC0_BSI_EN
AG22	GPIO_54/RFIC0_BSI_CK/MD2_BSI_CK	RFIC0_BSI_CLK
AH22	GPIO_55/RFIC0_BSI_D0/MD2_BSI_D0	RFIC0_BSI_DATA_0
AH21	GPIO_56/RFIC0_BSI_D1/MD2_BSI_D1	RFIC0_BSI_DATA_1
AG21	GPIO_57/RFIC0_BSI_D2/MD2_BSI_D2	RFIC0_BSI_DATA_2
AJ20	GPIO_58/RFIC1_BSI_EN/PCM1_CLK/MD2_BSI_EN	
AF21	GPIO_59/RFIC1_BSI_CK/PCM1_SYNC/MD2_BSI_CK	
AJ21	GPIO_60/RFIC1_BSI_D0/PCM1_DI/MD2_BSI_D0	
AK20	GPIO_61/RFIC1_BSI_D1/PCM1_DO/MD2_BSI_D1	
AL20	GPIO_62/RFIC1_BSI_D2/UTXD2/MD2_BSI_D2	
AK5	GPIO_63/MISC_BSI_CK	LTE_MIPI0_SCLK
AK4	GPIO_64/MISC_BSI_DO	LTE_MIPI0_SDATA
AK2	GPIO_65/MISC_BSI_DI/MIPI1_SDATA	LTE_MIPI1_SDATA
AJ3	GPIO_66/MISC_BSI_CS0B/MISC_BSI_CS1B/MIPI1_SCLK	LTE_MIPI1_SCLK
AK3	GPIO_67/MISC_BSI_CS1B/MISC_BSI_CS0B/MIPI1_SCLK	
AG26	GPIO_68/BPI_BUS0/MSDC2_CLK/MD2_BPI_BUS0	GPS_LNA_EN
AH27	GPIO_69/BPI_BUS1/MSDC2_CMD/MD2_BPI_BUS1	ANT1_MS_DETECTION (Added Net name 2/2)
AJ27	GPIO_70/BPI_BUS2/MSDC2_DAT0/MD2_BPI_BUS2	ANT2_MS_DETECTION
AK27	GPIO_71/BPI_BUS3/MSDC2_DAT1/MD2_BPI_BUS3	
AK26	GPIO_72/BPI_BUS4/MSDC2_DAT2/MD2_BPI_BUS4	
AJ26	GPIO_73/BPI_BUS5/MSDC2_DAT3/MD2_BPI_BUS5	
AH26	GPIO_74/BPI_BUS6/ANT_SEL0/MD2_BPI_BUS6	GRFC_6
AH25	GPIO_75/BPI_BUS7/ANT_SEL1/MD2_BPI_BUS7	GRFC_7
AG25	GPIO_76/BPI_BUS8/ANT_SEL2/MD2_BPI_BUS8	
AJ25	GPIO_77/BPI_BUS9/MD2_BPI_BUS9	GRFC_8
AJ24	GPIO_78/BPI_BUS10/MD2_BPI_BUS10	GRFC_9
AG24	GPIO_79/BPI_BUS11/MD2_BPI_BUS11	
AH23	GPIO_80/BPI_BUS12/MD2_BPI_BUS12	(TP2222)
AJ23	GPIO_81/BPI_BUS13/MD2_BPI_BUS13	
AK25	GPIO_82/BPI_BUS14/MD2_BPI_BUS14	GRFC_14
AL6	GPIO_83/BPI_BUS15/MD2_BPI_BUS15	
AJ8	GPIO_84/BPI_BUS16/MD2_BPI_BUS16	
AH8	GPIO_85/BPI_BUS17/MD2_BPI_BUS17	
AG7	GPIO_86/BPI_BUS18/MD2_BPI_BUS18	
AH7	GPIO_87/BPI_BUS19/MD2_BPI_BUS19	PCB_INDICATOR_0
AJ7	GPIO_88/BPI_BUS20/MD2_BPI_BUS20	PCB_INDICATOR_1
AK7	GPIO_89/BPI_BUS21/MD2_BPI_BUS21	PCB_INDICATOR_2
AK6	GPIO_90/BPI_BUS22/MD2_BPI_BUS22	PCB_INDICATOR_3
AL5	GPIO_91/BPI_BUS23/MD2_BPI_BUS23	
AJ6	GPIO_92/BPI_BUS24/MD2_BPI_BUS24	Delete Net name 2/2
AH6	GPIO_93/BPI_BUS25/MD2_BPI_BUS25	
AG5	GPIO_94/BPI_BUS26/MD2_BPI_BUS26	
AH5	GPIO_95/BPI_BUS27/MD2_BPI_BUS27	
AL3	GPIO_96/LTE_TXBPI/RF_DCCAL_RESULT_IN	RFIC0_TX_BPI
AK23	URXD2/RF_DCCAL_RESULT_IN_OGT/TD_TXBPI/GPIO_97	
J29	MSDC3_CLK/WB_CTRL0/GPIO_98	WB_CTRL_0
J28	MSDC3_CMD/WB_CTRL1/GPIO_99	WB_CTRL_1
K28	MSDC3_DAT0/WB_CTRL2/GPIO_100	WB_CTRL_2
L29	MSDC3_DAT1/WB_CTRL3/GPIO_101	WB_CTRL_3
L28	MSDC3_DAT2/WB_CTRL4/GPIO_102	WB_CTRL_4
M28	MSDC3_DAT3/WB_CTRL5/GPIO_103	WB_CTRL_5
L27	PCM0_DO/MRG_DO/WB_SCLK/GPIO_106	CONN_SPI_CLK
M27	PCM0_SYNC/MRG_SYNC/WB_SDATA/GPIO_107	CONN_SPI_DATA
P30	URXD3/UTXD3/WB_SEN/GPIO_108	CONN_SPI_EN
N30	UTXD3/URXD3/WB_RSTB/GPIO_109	CONN_RSTB
AG2	KPCOL0/GPIO_110 (TP2216)	
AF2	SCL3_2/SCL2_2/KPCOL1/GPIO_111	KEYPAD_SENSE_2
AF3	KPROW0/GPIO_112	
AG3	SDA3_2/SDA2_2/KPROW1/GPIO_113 (TP2202)	
W31	SCL3_3/SCL1_1/DPI_D0/GPIO_114	BAT_ID
W30	SDA3_3/SDA1_1/DPI_D1/GPIO_115	TOUCH_INT_N
Y28	UCTS1/DPI_D2/GPIO_116	
Y30	URTS1/DPI_D3/GPIO_117	DSV_ENN
Y27	SPI2_CSB/DPI_D4/GPIO_118	
AA27	ANT_SEL3/SPI2_CLK/DPI_D5/GPIO_119	TOUCH_RESET
AA30	ANT_SEL4/SPI2_MO/DPI_D6/GPIO_120	
AB31	ANT_SEL5/SPI2_MI/DPI_D7/GPIO_121	
AB30	AUD_DAT_MISO_SPK_A/I2S2_MCK/DPI_D8/GPIO_122	BAT_ID_PULLUP
V29	MD_CDMA_GPS_SYNC/I2S2_BCK/DPI_D9/GPIO_123	MAIN_CAM0_RESET_N
W28	I2S2_LRCK/DPI_D10/GPIO_124	HALL_INT
AB29	SRCLKENA0/I2S2_DI/DPI_D11/GPIO_125	SDCARD_DET
Y31	AUD_DAT_MISO_SPK_A/I2S2_MCK/DPI_DE/GPIO_126	
W29	I2S2_BCK/DPI_CK/GPIO_127	FLASH_CNTL_EN
W27	DBG_SCL/I2S2_LRCK/DPI_HSYNC/GPIO_128	FLASH_TX
V26	DBG_SDA/I2S2_DO/DPI_VSYNC/GPIO_129 (TP2201)	
V30	UTXD2/URXD2/I2S0_MCK/GPIO_130	PROXIMITY_INT
U30	URXD2/UTXD2/I2S0_BCK/GPIO_131	
T31	MD_INT2/I2S0_LRCK/GPIO_132	Delete Net name 01/08
U31	SRCLKENA0/AGPS_SYNC/I2S0_DI/GPIO_133	MT6311_INT
V28	UTXD0/URXD0/I2S1_MCK/GPIO_134	URXD0
V27	URXD0/UTXD0/I2S1_BCK/GPIO_135	UTXD0
U27	UTXD1/URXD1/I2S1_LRCK/GPIO_136	Delete Net name 01/08
U26	URXD1/UTXD1/I2S1_DO/GPIO_137	Delete Net name 01/08
AH3	URXD3/UTXD3/SRCLKENAI/GPIO_138	Delete Net name 01/08
AH2	UYXD3/URXD3/PWM_A/GPIO_139	COMPASS_INT
Y4	ANT_SEL1/MD_INT0/INT_SIM1/GPIO_140	LCD_BL_EN
Y5	ANT_SEL2/MD_INT1/INT_SIM2/GPIO_141	DSV_ENP
AB4	UCTS0/KPCOL2/IDDIG/GPIO_142	KEYPAD_SENSE_0
AA1	URTS0/KPROW2/DRVBUS/GPIO_143	VT_CAM_MAKER_ID (Added Net name 12/18)
AJ1	PWM_B/I2S2_MCK/SPI_CSB/GPIO_144	
AL2	AUD_DAT_MISO_SPK_C/I2S2_BCK/SPI_CLK/GPIO_145	
AH1	SPI_MI/I2S2_LRCK/SPI_MO/GPIO_146	
AJ2	SPI_MO/I2S2_DI/SPI_MI/GPIO_147	
AB28	AUD_DAT_MISO_SPK_B/VOW_CLK_MISO/GPIO_148	VOICE_CLK_MISO
AE30	MIPI_RDN0/GPIO_149	MAIN_CAM0_MIPI_DATA0_N
AE31	MIPI_RDP0/GPIO_150	MAIN_CAM0_MIPI_DATA0_P
AF31	MIPI_RDN1/GPIO_151	MAIN_CAM0_MIPI_DATA1_N
AF30	MIPI_RDP1/GPIO_152	MAIN_CAM0_MIPI_DATA1_P
AE27	MIPI_RCN/GPIO_153	MAIN_CAM0_MIPI_CLK_N
AE26	MIPI_RCP/GPIO_154	MAIN_CAM0_MIPI_CLK_P
AF29	MIPI_RDN2/GPIO_155	MAIN_CAM0_MIPI_DATA2_N
AF28	MIPI_RDP2/GPIO_156	MAIN_CAM0_MIPI_DATA2_P
AG30	MIPI_RDN3/GPIO_157	MAIN_CAM0_MIPI_DATA3_N
AH30	MIPI_RDP3/GPIO_158	MAIN_CAM0_MIPI_DATA3_P
AJ31	CMCSD2/CMDAT2/MIPI_RDN0_A/GPIO_159	VT_CAM_MIPI_DATA0_N
AH31	CMCSD3/CMDAT3/MIPI_RDP0_A/GPIO_160	VT_CAM_MIPI_DATA0_P
AJ30	CMDAT4/MIPI_RDN1_A/GPIO_161	VT_CAM_MIPI_DATA1_N
AK30	CMDAT5/MIPI_RDP1_A/GPIO_162	VT_CAM_MIPI_DATA1_P
AG29	CMHSYNC/MIPI_RCN_A/GPIO_163	VT_CAM_MIPI_CLK_N
AH29	CMVSYNC/MIPI_RCP_A/GPIO_164	VT_CAM_MIPI_CLK_P
AJ29	CMDAT6/MIPI_RDN2_A/GPIO_165	
AK29	CMDAT7/MIPI_RDP2_A/GPIO_166	
AL30	CMDAT8/MIPI_RDN3_A/GPIO_167	
AL29	CMDAT9/MIPI_RDP3_A/GPIO_168	
K2	MIPI_TDN3/GPIO_169	LCD_MIPI_DATA3_N
L2	MIPI_TDP3/GPIO_170	LCD_MIPI_DATA3_P
M2	MIPI_TDN2/GPIO_171	LCD_MIPI_DATA2_N
M1	MIPI_TDP2/GPIO_172	LCD_MIPI_DATA2_P
L5	MIPI_TCN/GPIO_173	LCD_MIPI_CLK_N
M5	MIPI_TCP/GPIO_174	LCD_MIPI_CLK_P
N2	MIPI_TDN1/GPIO_175	LCD_MIPI_DATA1_N
N3	MIPI_TDP1/GPIO_176	LCD_MIPI_DATA1_P
N4	MIPI_TDN0/GPIO_177	LCD_MIPI_DATA0_N
M4	MIPI_TDP0/GPIO_178	LCD_MIPI_DATA0_P
P27	PCM0_CLK/MRG_CLK/F2W_DATA/GPIO_104	FM_DATA
P28	PCM0_DI/MRG_DI/F2W_CLK/GPIO_105	FM_CLK
F30	GPS_RXQN/GPIO_179	GPS_RX_Q_N
F31	GPS_RXQP/GPIO_180	GPS_RX_Q_P
G31	GPS_RXIN/GPIO_181	GPS_RX_I_N
G30	GPS_RXIP/GPIO_182	GPS_RX_I_P
L30	WB_RXQN/GPIO_183	WB_RX_Q_N
M30	WB_RXQP/GPIO_184	WB_RX_Q_P
M31	WB_RXIN/GPIO_185	WB_RX_I_N
N31	WB_RXIP/GPIO_186	WB_RX_I_P

LG Electronics

TITLE: LG-H522y

SIZE	DWG NO	REV
A2	PDM NUMBER	Rev

DRAWN BY: User Name — SHEET 2-1-1_MSM8974_DATA — DATE Drawing Date

LGE Internal Use Only

< 2-3-5-1-3_MT6732_POWER >

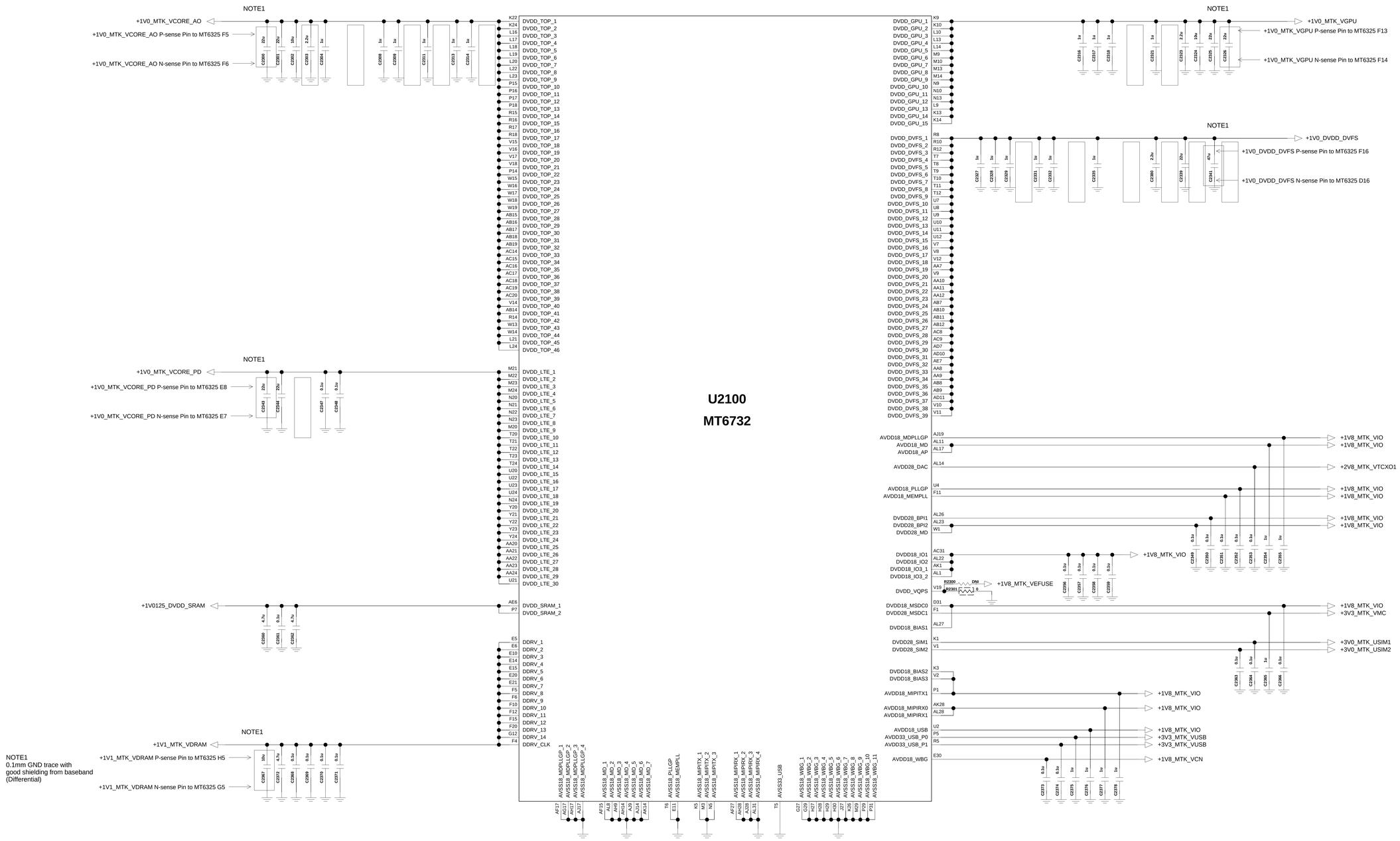

LGE Internal Use Only

LG Electronics	
TITLE	LG-H522y
SIZE A2	DWG NO PDM NUMBER REV Rev
DRAWN BY User Name	SHEET 2-1-1_MSM8974_DATA Drawing Date

< 2-3-5-1-4_MT6732_GND >

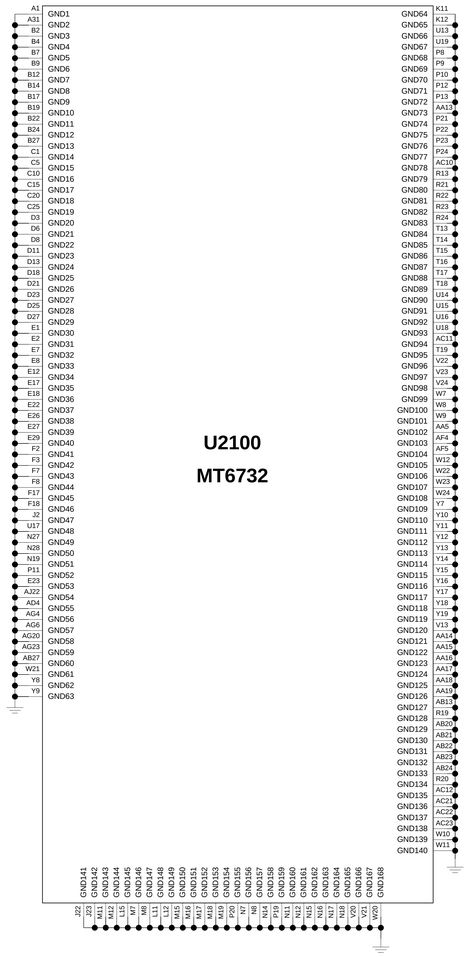

LGE Internal Use Only

	LG Electronics
TITLE	LG-H522y
SIZE A2	DWG NO PDM NUMBER
	REV Rev
DRAWN BY User Name	SHEET 2-1-1_MSM8974_DATA
	DATE Drawing Date

<3_3_3_2_1_MCP_eMMC_v5_0_8G_DDR3_8G_Samsung>

Rev_1.0

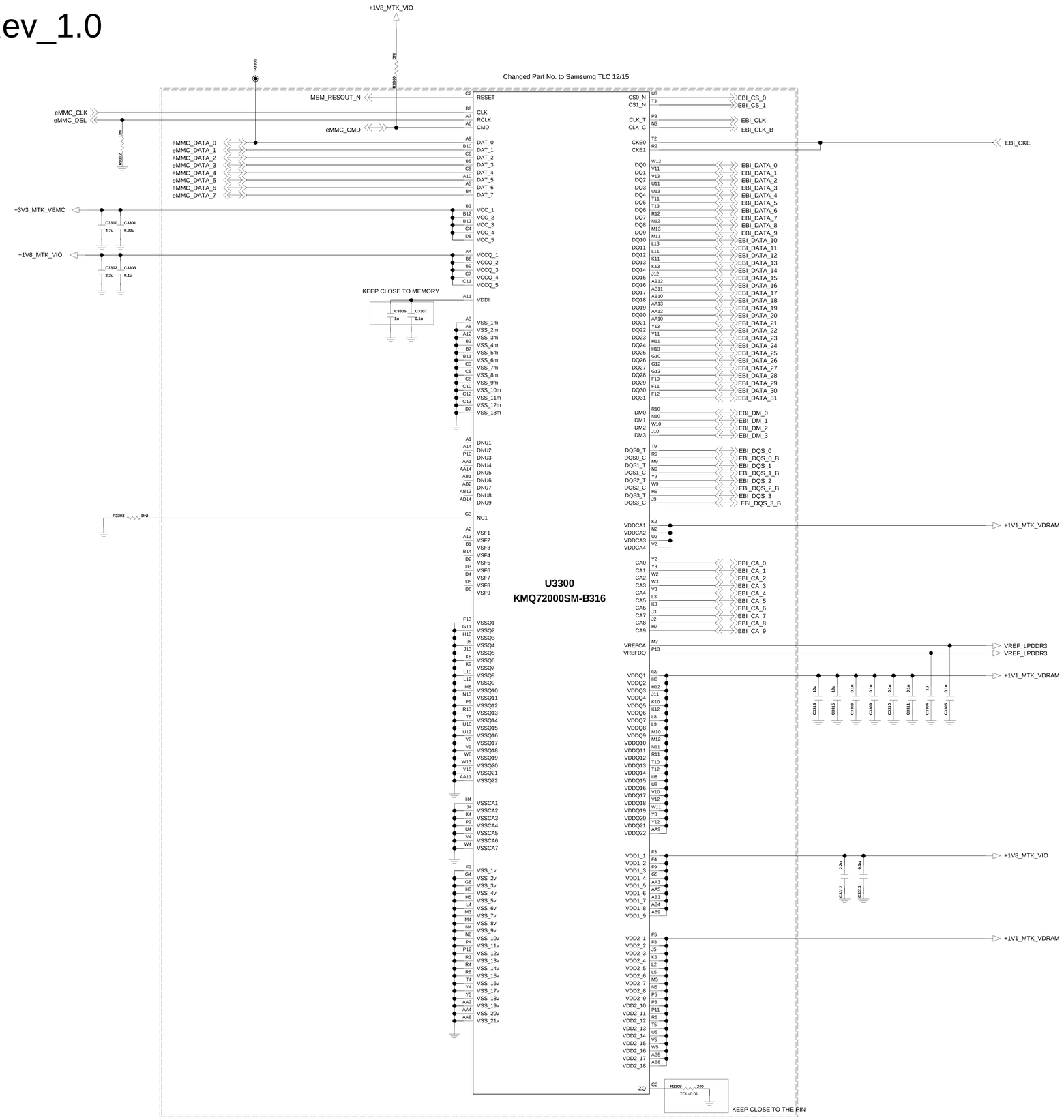

LG Electronics

TITLE: LG-H522y

SIZE: A2 | DWG NO: PDM NUMBER | REV: Rev

SHEET: 2-1-1_MSM8974_DATA | DATE: Drawing Date | DRAWN BY: User Name

LGE Internal Use Only

< 4-1-12-1_PMIC_MT6325_DATA >

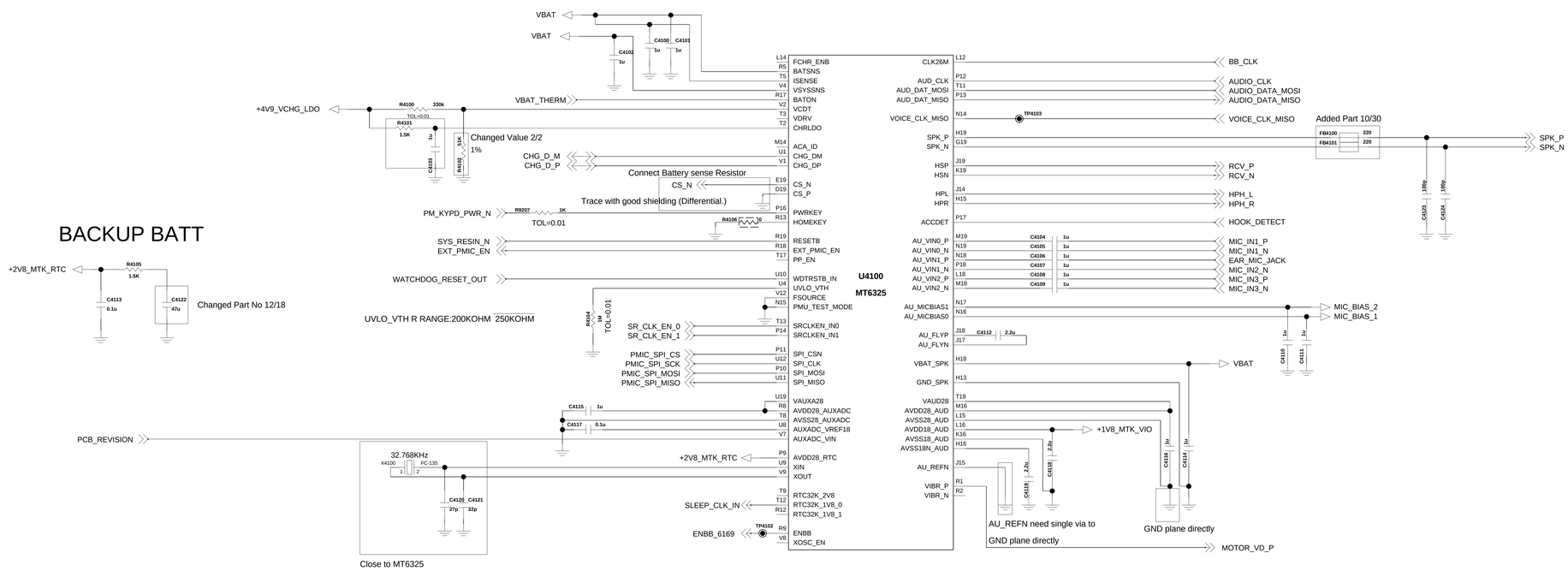

BACKUP BATT

LGE Internal Use Only

LG Electronics	
TITLE	LG-H522y
SIZE A2	DWG NO PDM NUMBER
REV Rev	
DRAWN BY User Name	SHEET 4711_PMIC_PM8226
DATE Drawing Date	

<4-1-12-2_PMIC_MT6325_POWER>

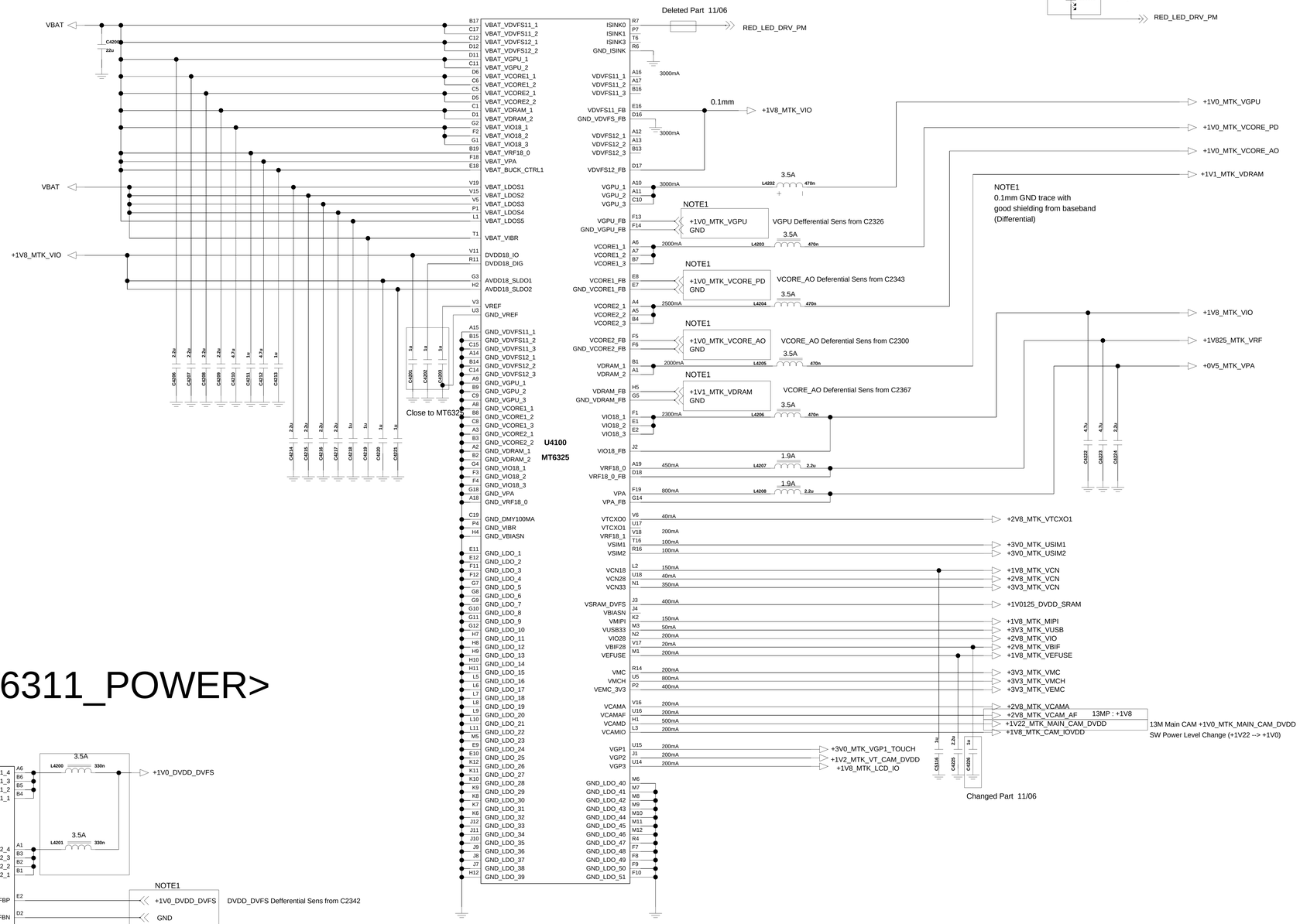

RED LED

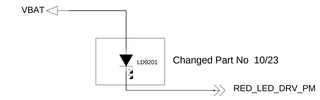

<4-2-7_2'nd PMIC_MT6311_POWER>

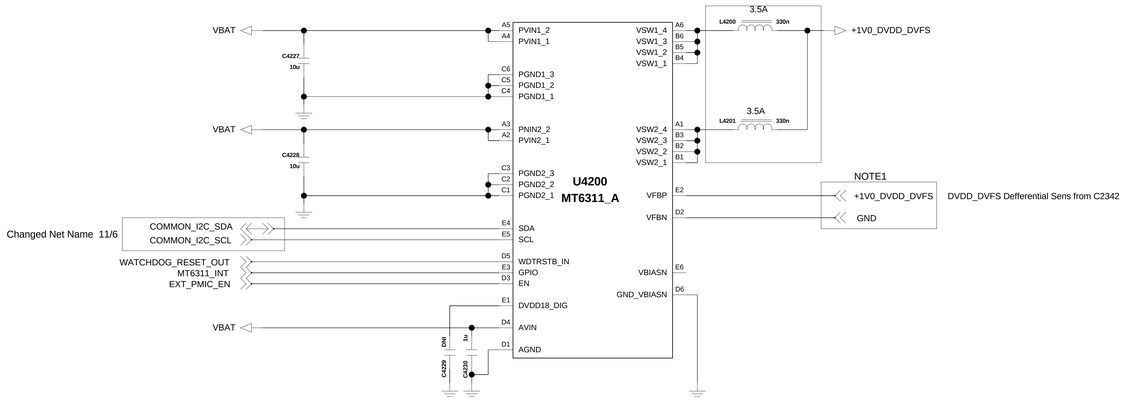

LGE Internal Use Only

LG Electronics	
TITLE	LG-H522y
SIZE A2	DWG NO PDM NUMBER
REV Rev	
DRAWN BY User Name	SHEET 4-1-3-3_PMIC_PM8926_POWER
DATE Drawing Date	

<5-1-1-18_MT6625L_WiFi_BT_GPS_FM>

Rev_0.3

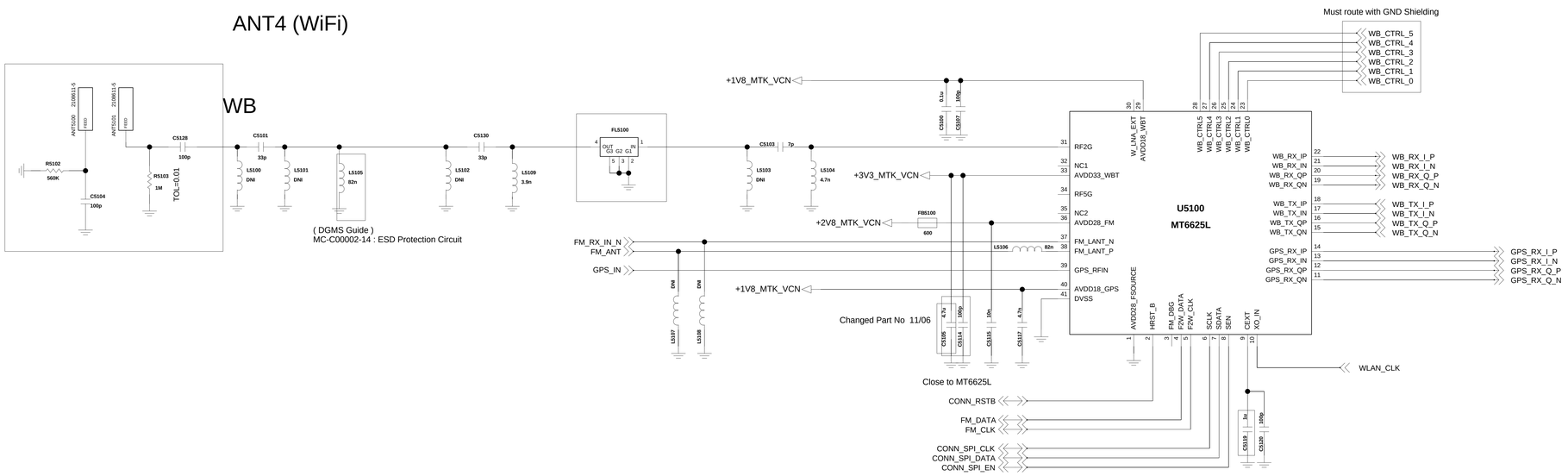

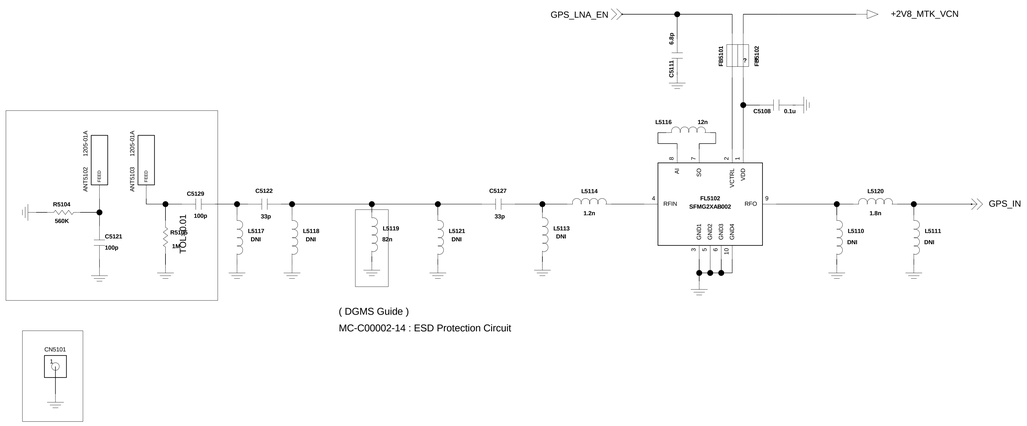

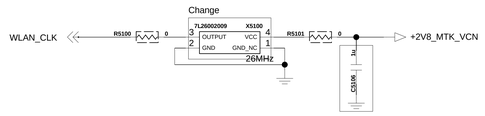

LG Electronics

TITLE: LG-H522y

SIZE: A2 | DWG NO: PDM NUMBER | REV: Rev

Drawn by: User Name | SHEET 8 OF 8 | Date: Drawing Date

LGE Internal Use Only

<7-1-5_LCD_HD> Rev_1.1

JDI 5.0 inch HD Hybrid LCD

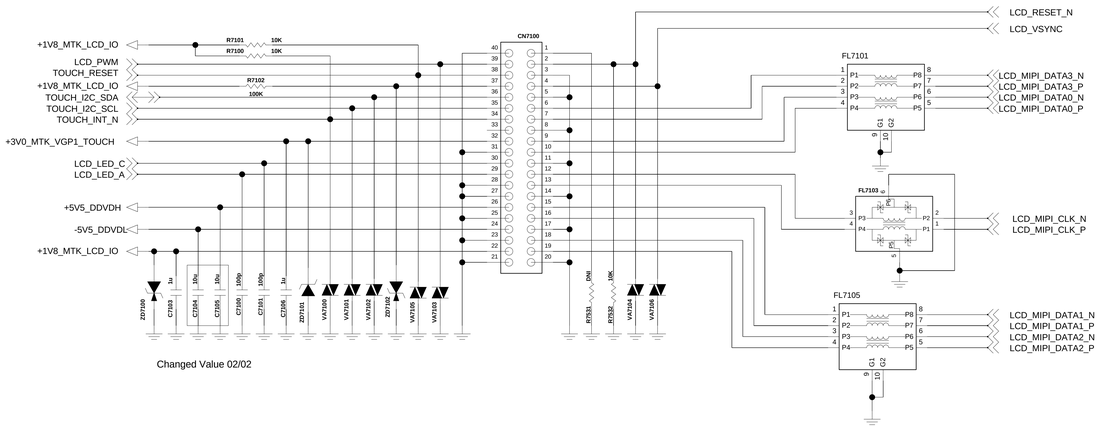

Changed Value 02/02

<4-4-3_LCD_Backlight_IC_RT8542>

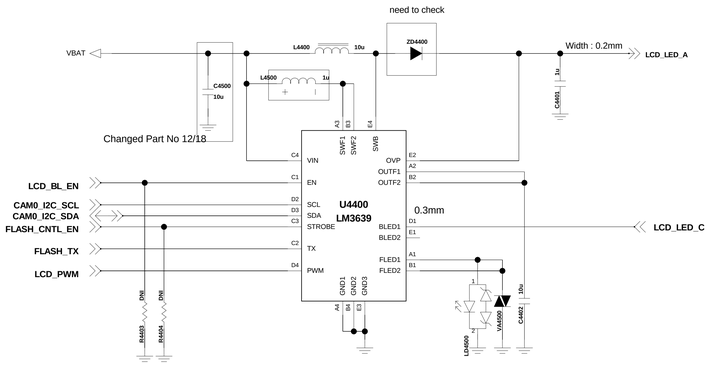

<7-5-8_DSV_DW8768> Rev_0.3

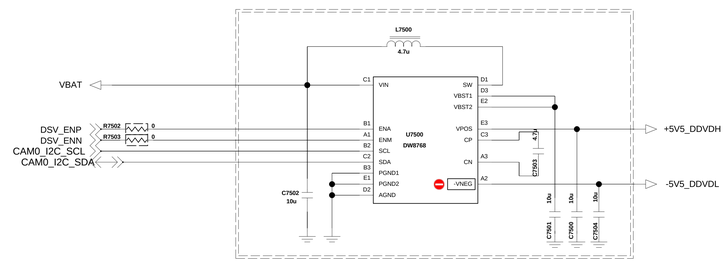

DGMS Guide
MC-C06162-1 : 1. Don't connect Positive of Tantal, TVS diode to Negative voltage if use
2. We recommend MLCC capacitor in this case

<7-3_Main_Camera> Rev_1.0

8MP camera Default

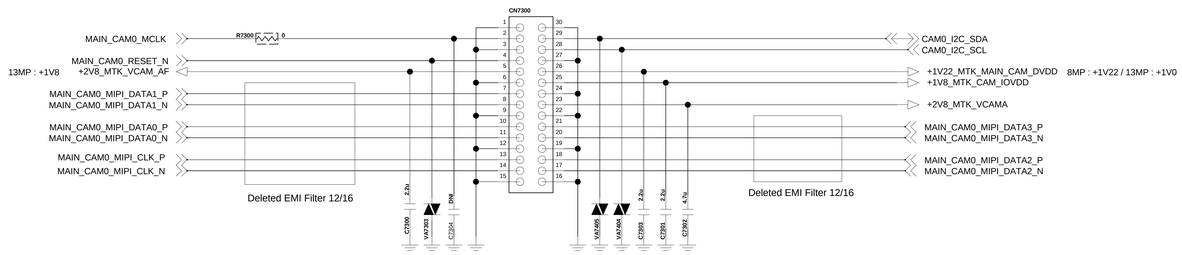

< 7-4-1_VT_Camera_24pin_5M>

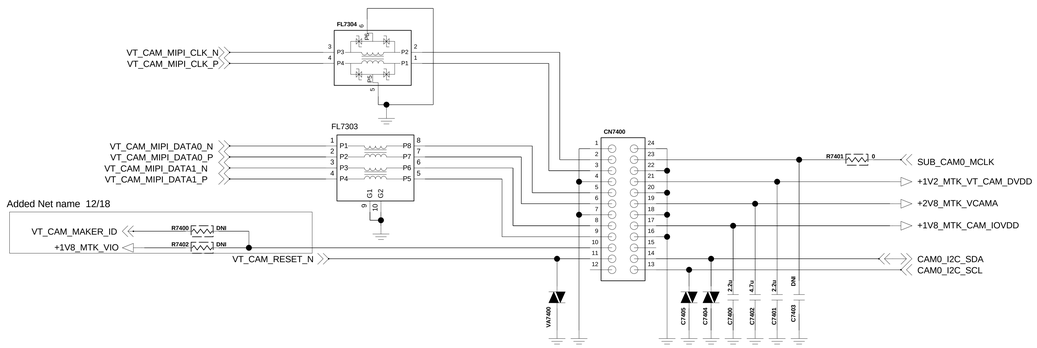

LGE Internal Use Only

LG Electronics	
TITLE	LG-H522y
SIZE A2	DWG NO PDM NUMBER
REV Rev	
DRAWN BY User Name	SHEET 1 of 2
Date Drawing Date	

< 6-6-1_Earjack >

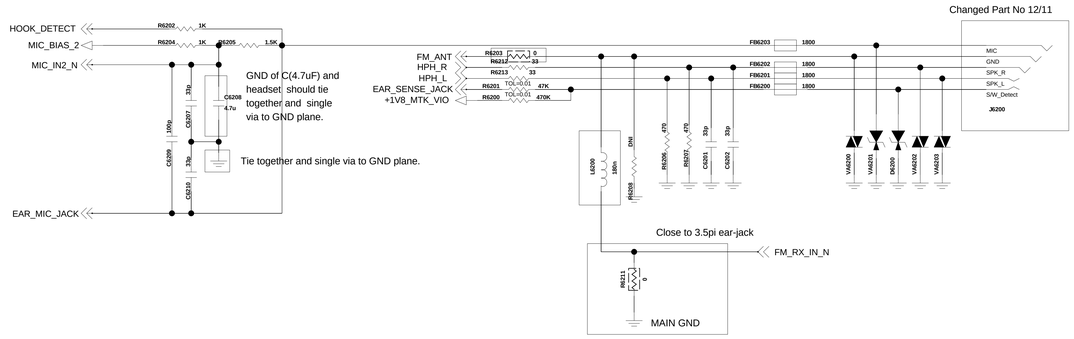

< 6-9-2_2MIC > Rev_0.4

MAIN_MIC

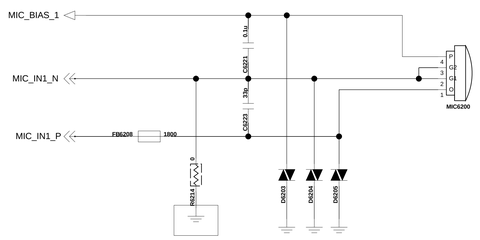

(DGMS Guide)
MC-C00074-11 : For ESD Protection / Tuning points
When USE) TVS devices's Working Voltage
must be greater than the Path voltage

SUB_MIC

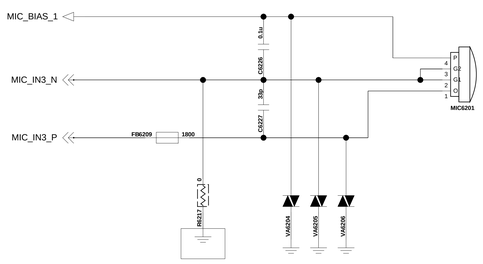

(DGMS Guide)
MC-C00074-11 : For ESD Protection / Tuning points
When USE) TVS devices's Working Voltage
must be greater than the Path voltage

< 6-7-1_Speaker > Rev_0.4

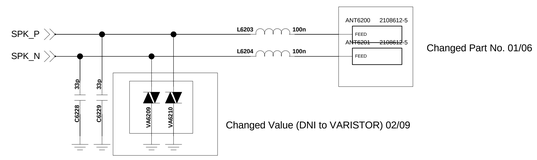

(DGMS Guide)
MC-C04773-8 : For ESD Protection / Tuning points
When USE) TVS devices's Working Voltage must be greater than the Path voltage
should apply capacitor under 50pF value for ESD protection with d-class amp

< 6-8-2_Receiver>
Rev_0.4

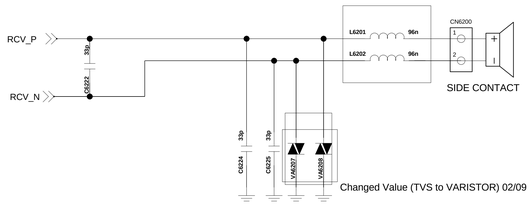

(DGMS Guide)
MC-C04773-8 : For ESD Protection / Tuning points
When USE) TVS devices's Working Voltage
must be greater than the Path voltage

LG Electronics

TITLE LG-H522y

SIZE A2 | DWG NO PDM NUMBER | REV Rev

DRAWN BY User Name | SHEET Sensor 5 | Date Drawing Date

LGE Internal Use Only

<8-1-2-1_Accel_Compass_BMC150> REV_1.0

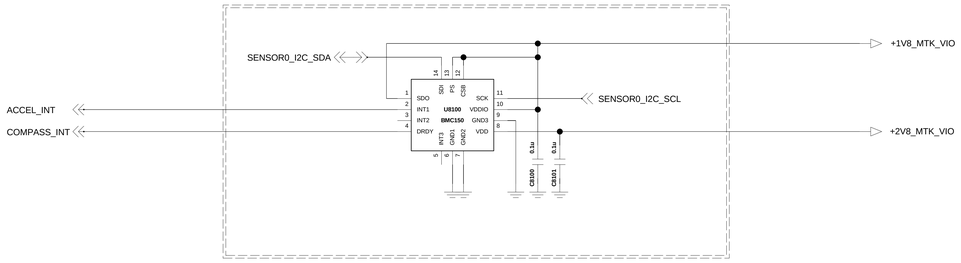

<8-4-1-X_Proximity_RPR-0521>

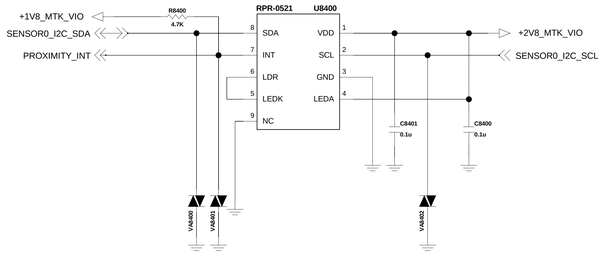

< 9-9-1-1_Motor >

Rev_0.3

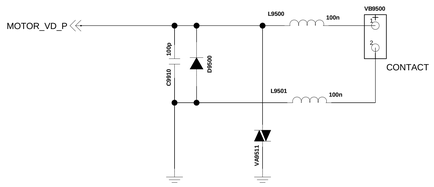

<8-7-1-5_Hall_IC_S5717> Rev_1.1

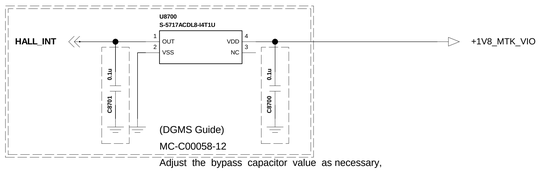

(DGMS Guide)
MC-C00058-12
Adjust the bypass capacitor value as necessary, according to signal line noise conditions

LG Electronics

TITLE LG-H522y

SIZE A2 | DWG NO PDM NUMBER | REV Rev

DRAWN BY User Name | SHEET Sensor of 5 | Date Drawing Date

LGE Internal Use Only

<9-1-2_Battery_CNT_4P> REV.0.6

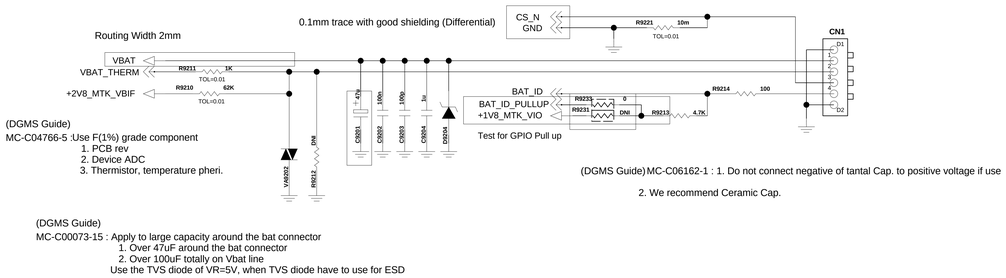

<4-7-1-1_Linear Charger_RT9536> Rev_0.3

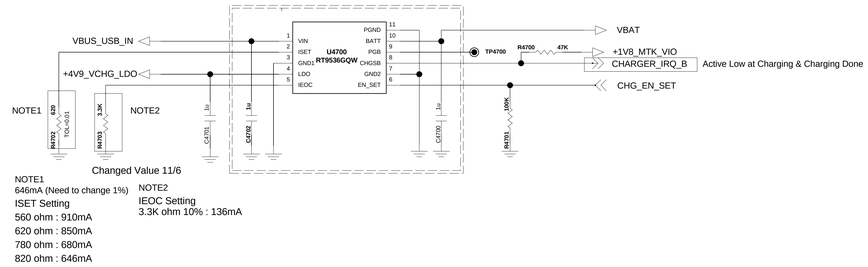

< 9-2-1_IO_USB2.0 > Rev_0.5

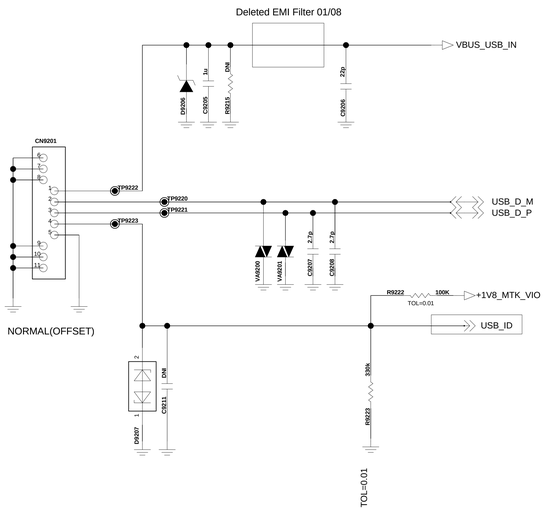

<TOP SHIELD CAN CLIP>

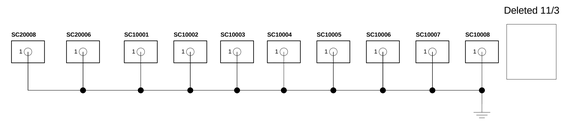

<BOTTOM SHIELD CAN CLIP>

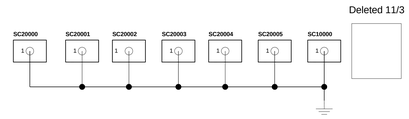

<Coaxial Cable Clip >

<GND Clip >

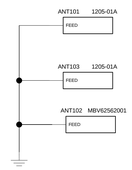

BACK KEY CONNECTOR

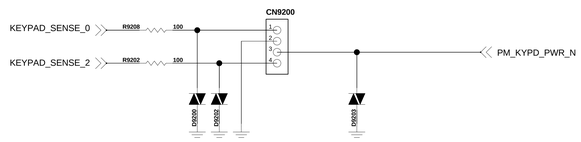

	Sense0-KCOL2	Sense2-KCOL1
GND	UP	DOWN

PID 6x6

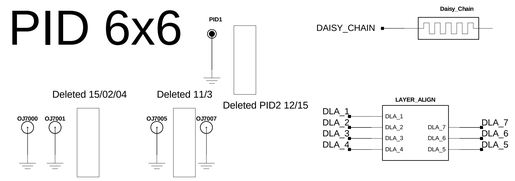

LGE Internal Use Only

LG Electronics

TITLE LG-H522y

SIZE	DWG NO	REV
A2	PDM NUMBER	Rev

DRAWN BY: User Name | SHEET etc OF 19 | Date Drawing Date

< 9-5-3_Micro_SD_Combo >

Main PCB

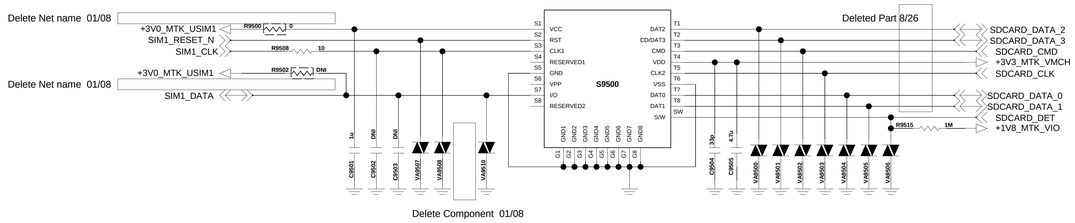

<Dual Sim Connector>

Main PCB

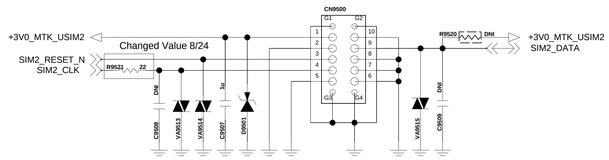

LGE Internal Use Only

LG Electronics

TITLE LG-H522y

SIZE A2 | DWG NO PDM NUMBER | REV Rev

Drawn by User Name | SHEET 31 OF 17 | Date Drawing Date

U2100_MT6732_IC,Digital Baseband Processor(Top View)

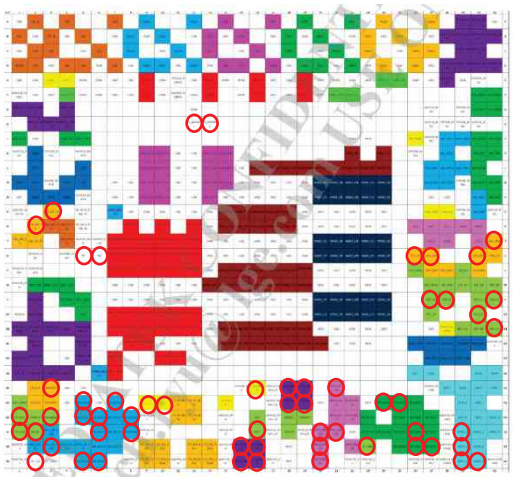

O Not used

U3300_KMQ72000SMB-316,IC,MCP.eMMC4905(Top View)

O Not used

U4100_MT6325_IC,PMIC (Top View)

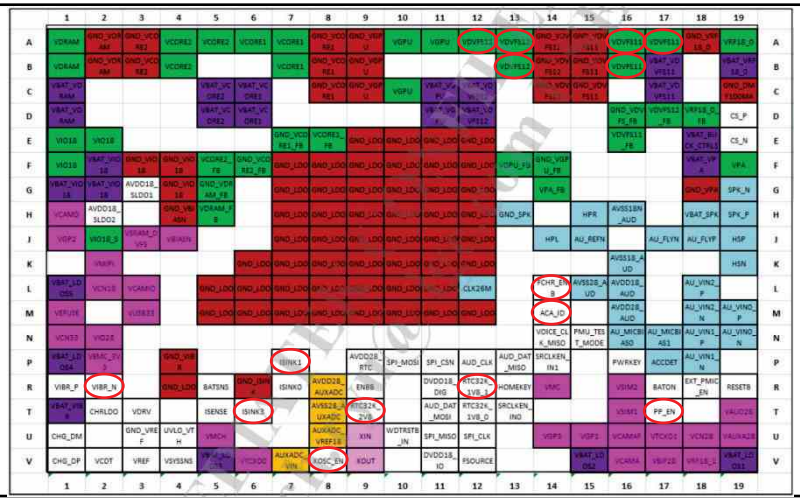

O Not used

U4200_MT6311_IC,2nd PMIC (Top View)

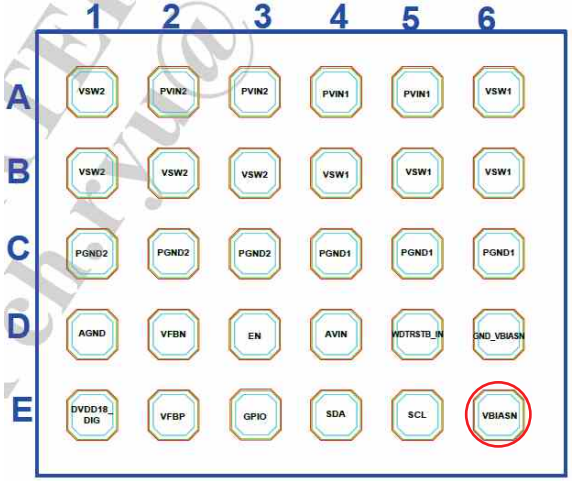

O Not used

Copyright © 2015 LG Electronics. Inc. All right reserved. Only training and service purposes

LG-H522y-MAIN_TOP-1

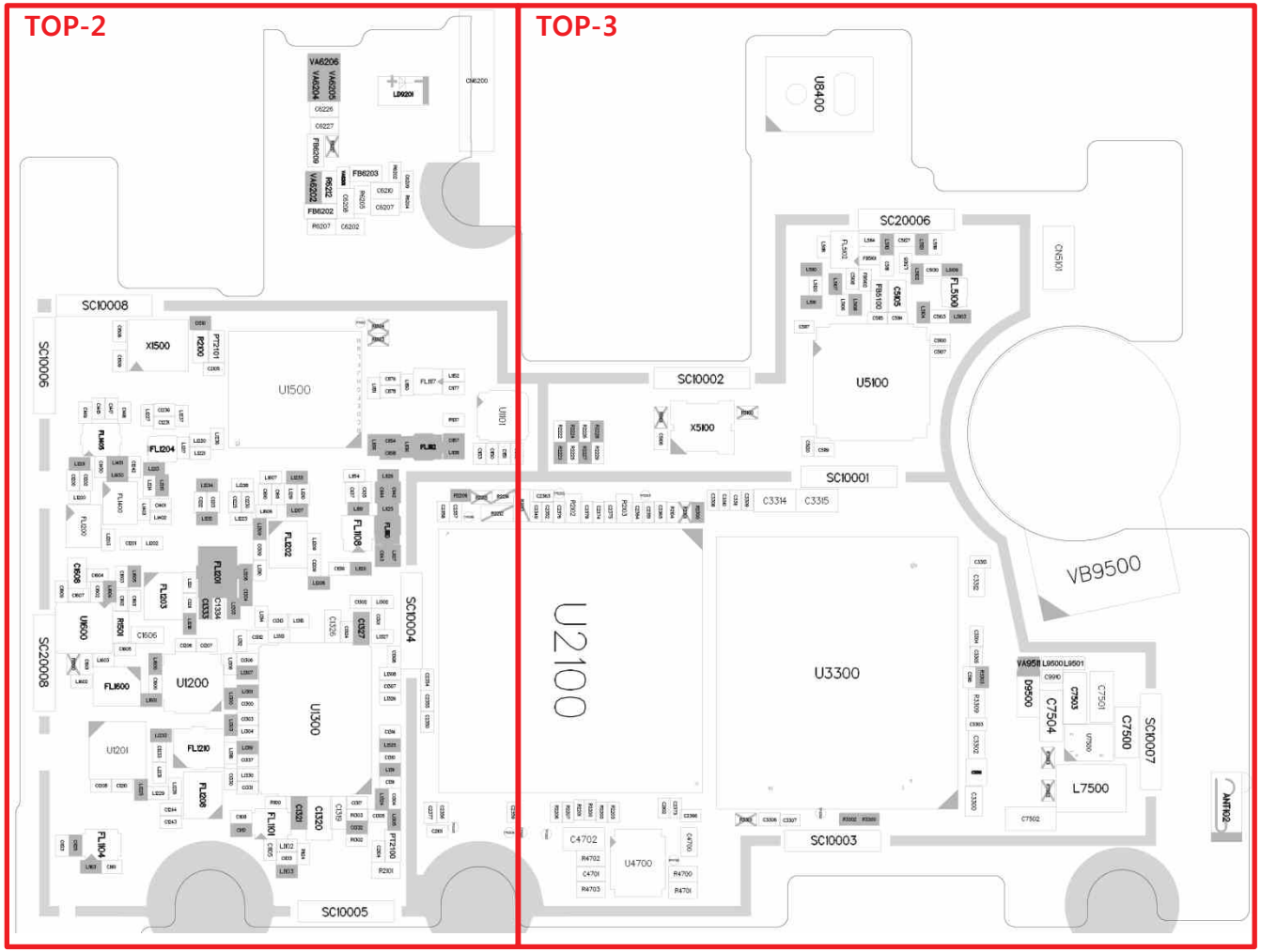

Copyright © 2015 LG Electronics. Inc. All right reserved. Only training and service purposes

LG-H522y-MAIN_TOP-2

FL1204 Filter
G1900 No service

FL1302 Switch
B28 No power on

FL1400 Duplexer
B28 No power on/No service

FL1200 Duplexer
B28 No power on/No service

FL1203 Duplexer
B8 No power on/No service

U1600 PAM
B7 No power on

U1200 ASM
B5/7/8/28/G850/G900 No on

FL1600 Duplexer
B7 No power on/No service

FL1210 Duplexer
B1 No power on/No service

U1201 ASM
B1/3/DCS/PCS No on

FL1208 Duplexer
B3 No power on/No service

FL1101 Coupler
B5/7/8/28/G850/G900 No service

FL1104 Coupler
B1/3/DCS/PCS No service

U1500 MT6169
No service

FL1117 Filter
No B7 diversity

U1101 SP8T
No diversity

FL1202 Duplexer
B5 No power on/No service

FL1108 Filter
No B28 diversity

U1300 PAM
B1/3/5/8/28/G850/G900/DCS/
PCS No power on

Copyright © 2015 LG Electronics. Inc. All right reserved. Only training and service purposes

LG-H522y-MAIN_TOP-3

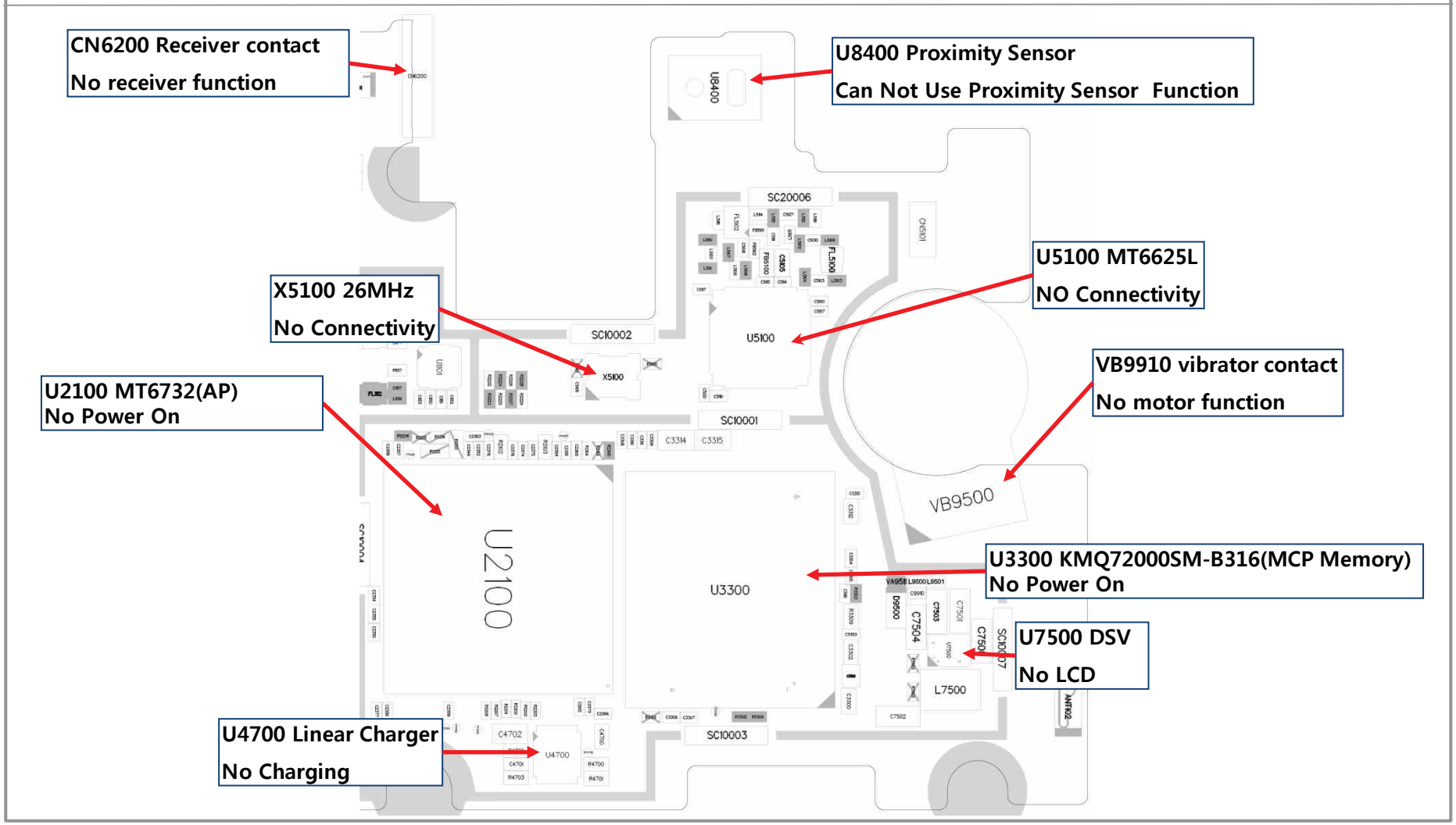

Copyright © 2015 LG Electronics. Inc. All right reserved. Only training and service purposes

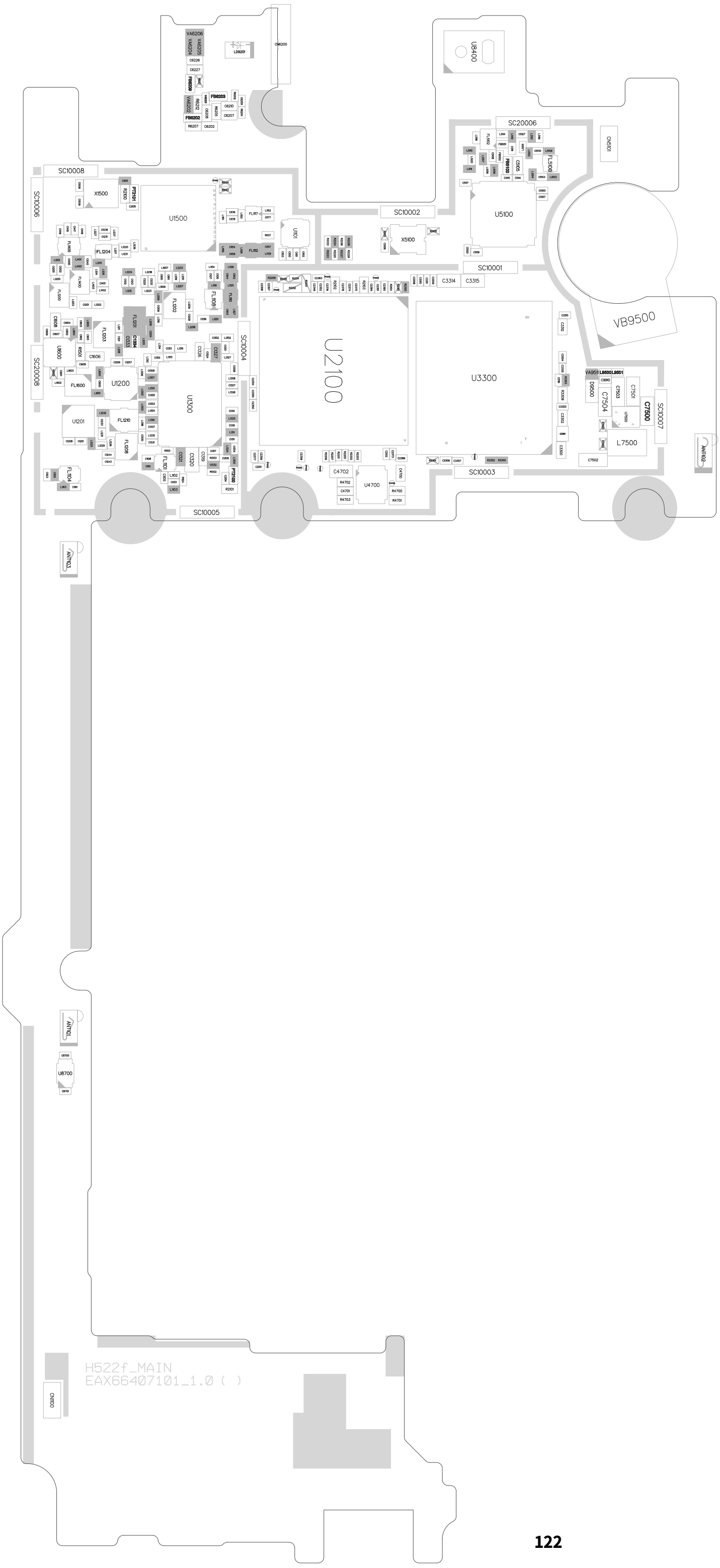

LGE Internal Use Only

LG-H522y-MAIN_BOT-1

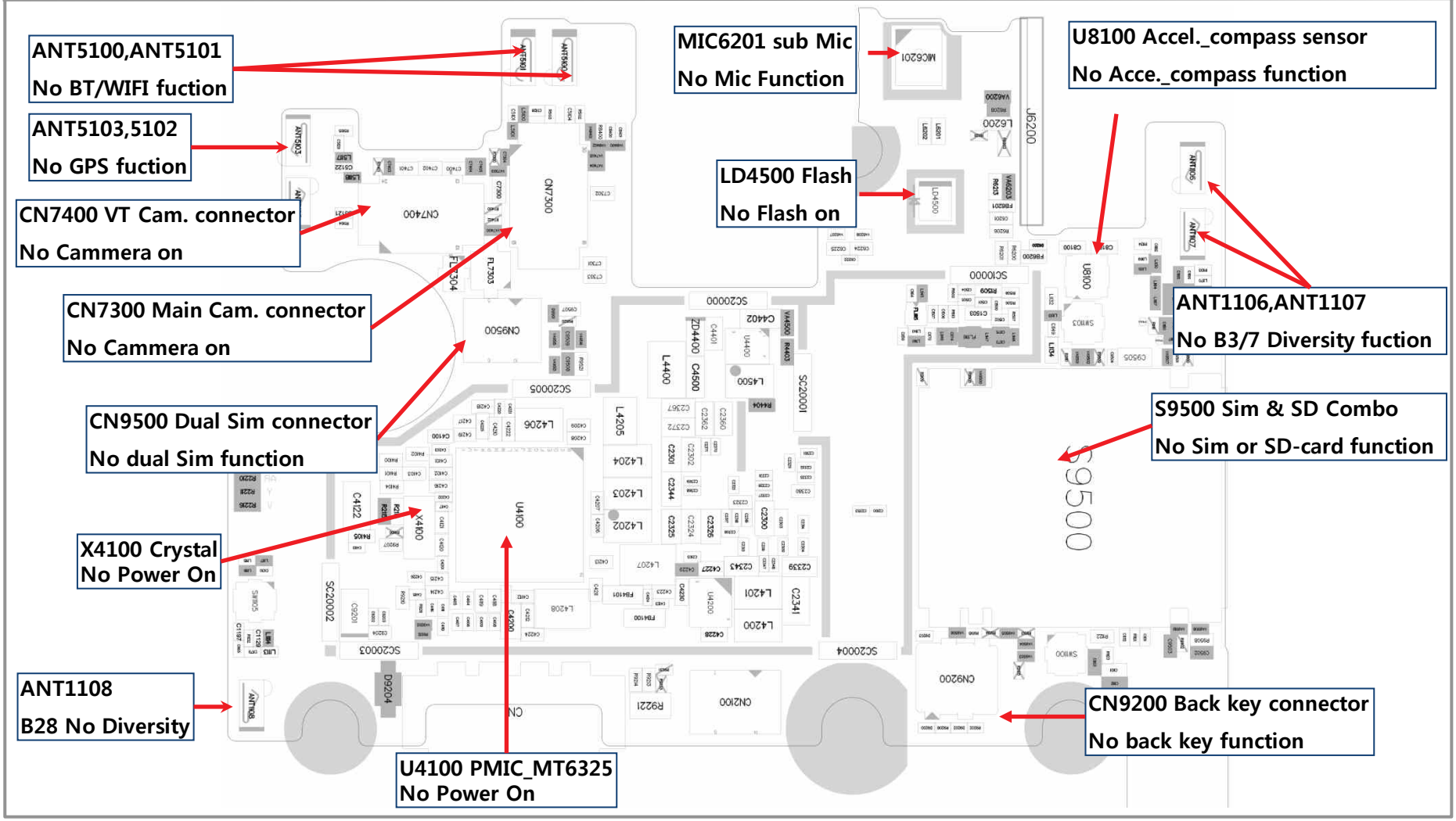

Copyright © 2015 LG Electronics. Inc. All right reserved. Only training and service purposes

LG-H522y-MAIN_BOT-2

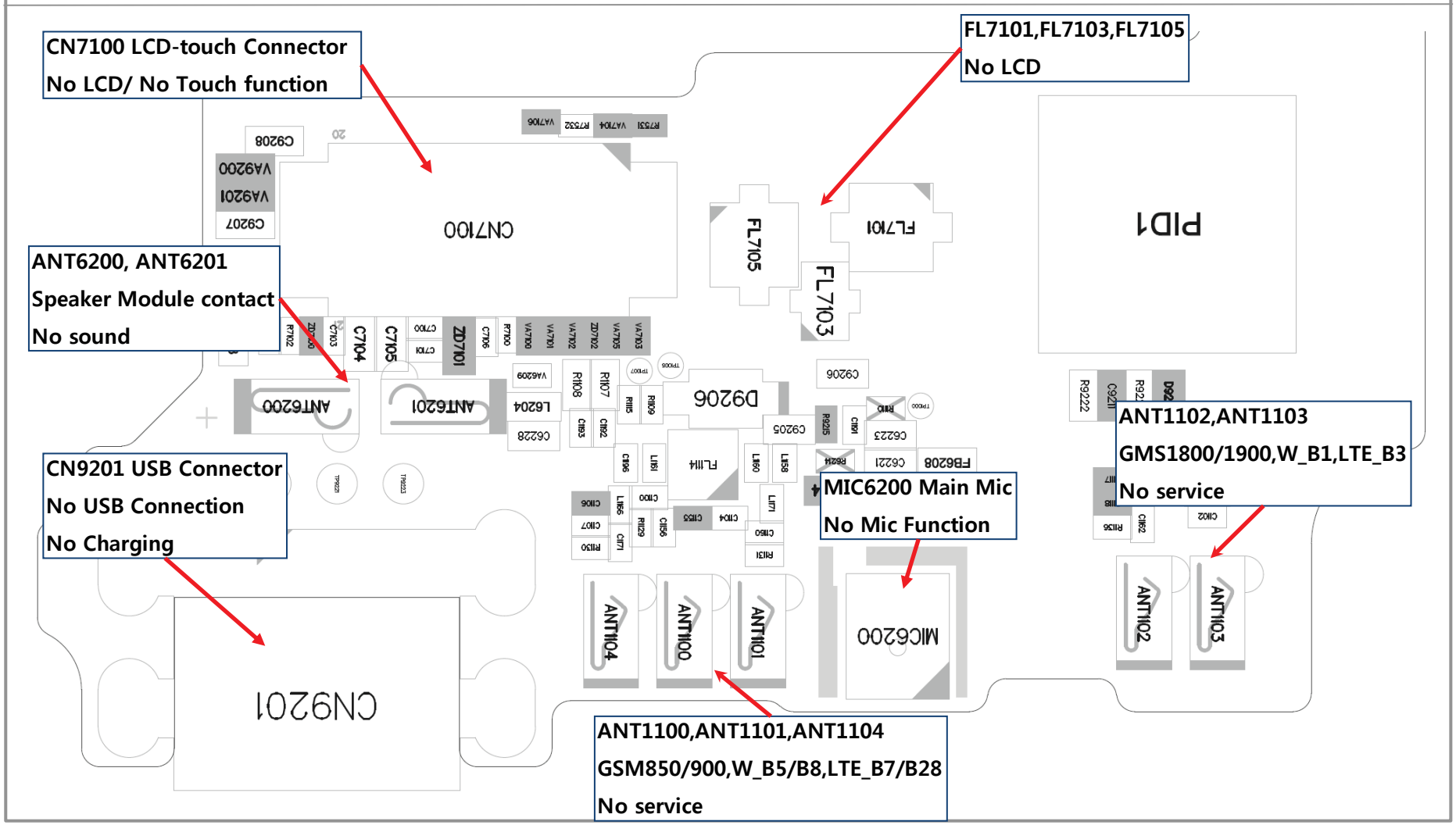

Copyright © 2015 LG Electronics. Inc. All right reserved. Only training and service purposes

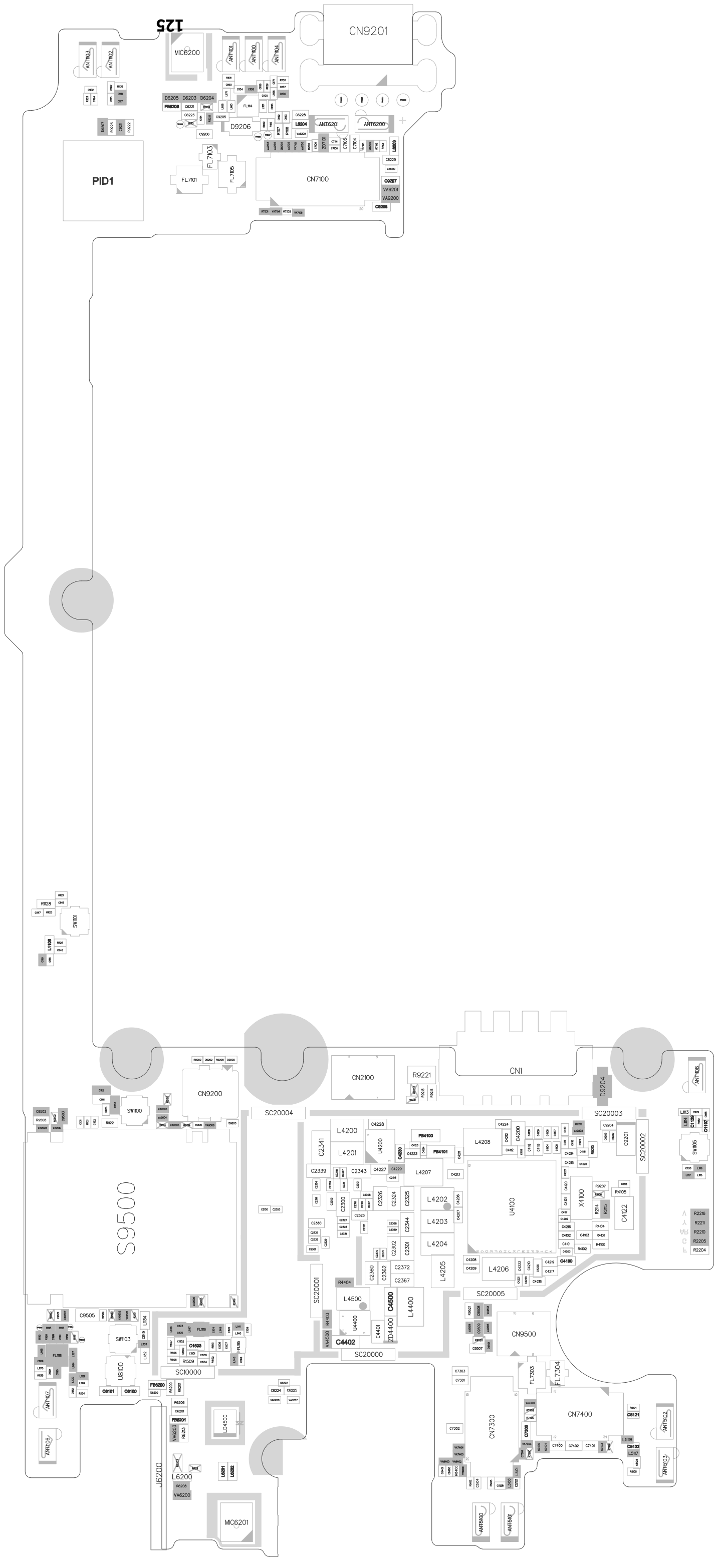
CN9201
MIC6200
ANT1103
ANT1102
ANT1101
ANT1100
ANT1104
D6205 D6203 D6204
FB6208
D9206
FL1114
ANT6201
ANT6200
L6204
L6203
PID1
FL7103
FL7101
FL7105
CN7100
C9207
VA9201
VA9200
C6208
R1128
SW1101
L4100
CN2100
R9221
CN1
D9204
ANT1108
CN9200
SW1100
SC20004
SC20003
SC20002
SW1105
S9500
L4200
L4201
U4200
C2341
C2339
C2343
C4228
FB4100
FB4101
L4208
C4200
C9204
C9201
L4207
U4100
X4100
R4105
C4122
R2216
R2211
R2210
R2205
R2204
L4202
L4203
L4204
L4205
L4206
C4100
SC20001
SC20005
L4500
C4500
L4400
U4400
C4401
ZD4400
C4402
R4404
R4403
VA4500
SC20000
CN9500
C9505
SW1103
U8100
C8101
C8100
SC10000
R1509
C1603
FL1115
ANT1107
ANT1106
J6200
L6200
VA6200
LD4500
L6301
L6302
MIC6201
FL7303
FL7304
CN7300
CN7400
C6121
C6122
ANT5102
ANT5103
ANT5100
ANT5101

1. Hidden Menu Start

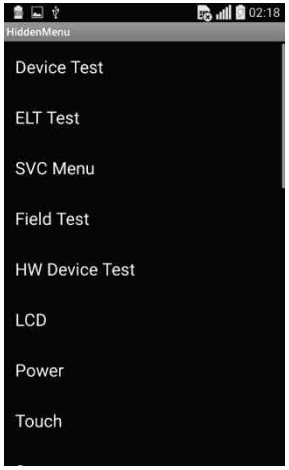

- Start shortcut key:
  *#546368#*522#
- Hidden Menu List
  : Start the desired menu, click

2. Device Test

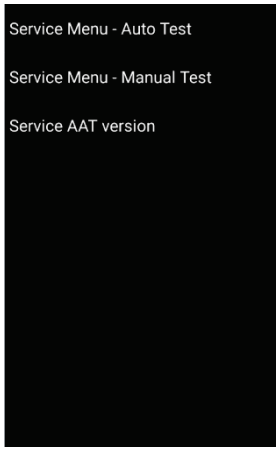

- Service Menu – Auto Test
- Service Menu – Manual Test
- Service AAT version
  → Hidden Menu version Display

2. Device Test

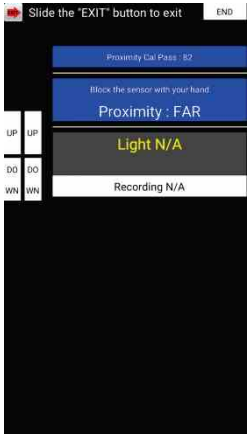

- Service Menu – Auto Test
  → All Test Items are continued one after another.
  → Continuous information on the menu, giving you ability test.

3. Device test List

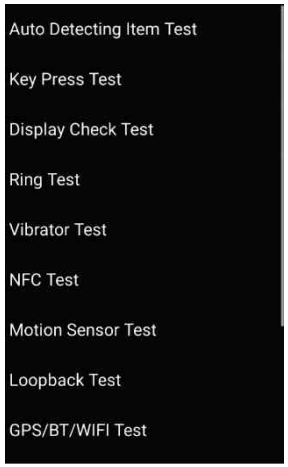

- Service Menu – Manual Test
  → Each test item can be selected and performed by user.

Copyright © 2015 LG Electronics. Inc. All right reserved. Only training and service purposes

1. Auto Detecting Item Test	2. Key Press Test	3. Display Check Test	4. Ring Test
	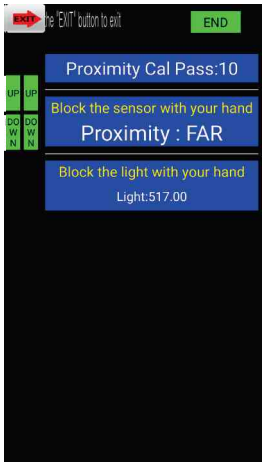	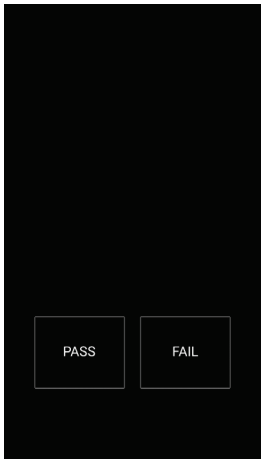	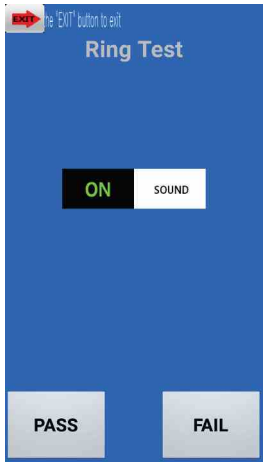
5. Vibrator Test	**6. Motion Sensor Test**	**7. Loop Back Test**	**8. GPS/BT/WIFI Test**
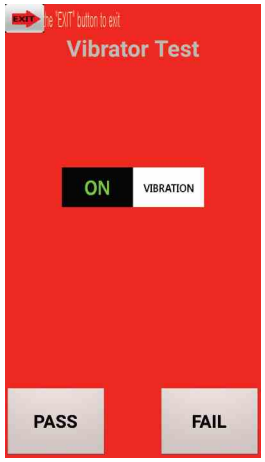	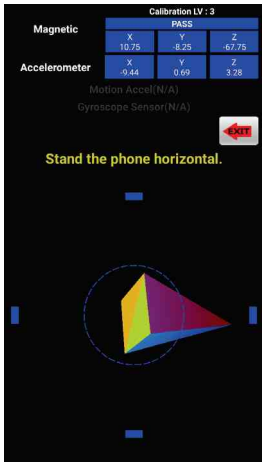		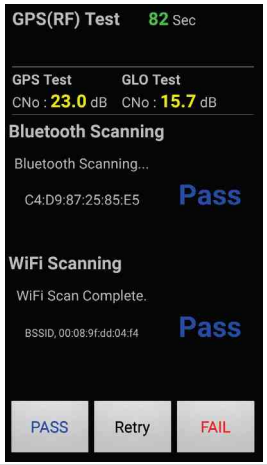

Copyright © 2015 LG Electronics. Inc. All right reserved. Only training and service purposes

9. Touch Draw -Manual	10. Camera(Main) Test	11. Camcorder Test	12. Camera(VT) Test
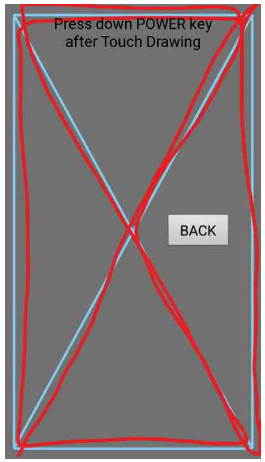		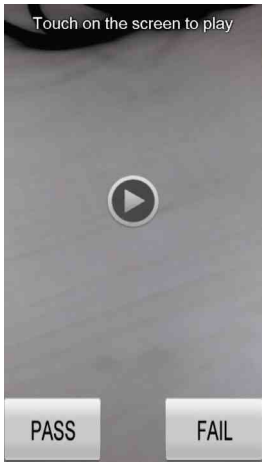	

Copyright © 2015 LG Electronics. Inc. All right reserved. Only training and service purposes

1. Summary

Tool Version	DLL name	USB Driver	
LGFLASHv201	LGH522y_20150715_LGFLASHv190_Download	LGUnitedMobileDriver_S50MAN311AP22_ML_WHQL_Ver_3.11.3	
Please Check the Version to "B2B"			
H/W			
	Name	Part No.	SW
D/L Cable	Micro 5P (56-open-910K) USB DLC	RAD32167835	TOT

2. . USB COM port Setting

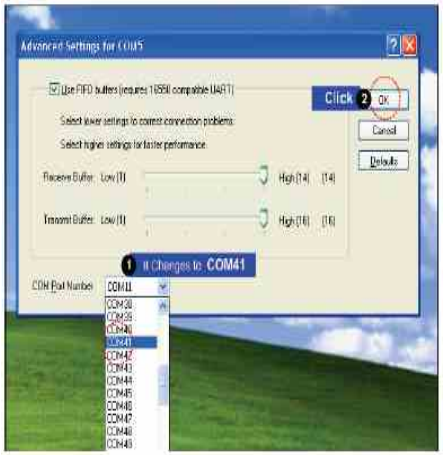

3. USB D/L Cable setting

4. Flash tool D/L setting

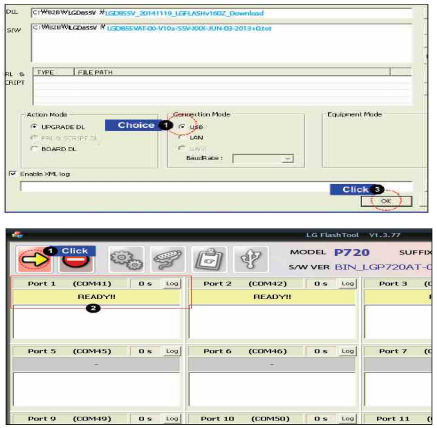

※ If you want more information, please refer B2B's Notification "Download User Guide".

Copyright © 2015 LG Electronics. Inc. All right reserved. Only training and service purposes

1. Summary

CAL INFORMATION		
S/W VERSION		
[TachyonV2013]LGH522Y 20150720 ALL File Calibration		
Please Check the Version to "B2B"		
H/W		
	Name	Part No.
PIF	PIF200	BJAY0024021
USB Cable	USB Cable 2.0	RAD32247898
Power Cable	DC Power Cable	RAD32247878
I/O Cable	5P E-SATA DC Plug	RAD32167861
RF Cable Main	MXFJM3WX6000	RAD32827895
Power Supply PIF	Power supply 5.2V	
Power Supply Phone	Power supply 5.0V	
PF Test Equipment	CMW500	
Notice	1. Use the Battery (Refer to Attached ppt) 1) Phone states: Power off 2) If do not use the battery, TX fails. 2. Port Setting (Refer to Attached ppt) 1) Uart Port1 : Use the "LGE Mobile USB Serial Port"	
CMW 500 RF Cable connection	Reference to Attached ppt ▷How to connect between phone RF switch and RF 800A: It has to be connected as below ▷How to connect between CMW500 and RF800A ; It has to connected as below - CMW500 [RF1COM] to RF-800A [left COM], - CMW500 [RF2COM] to RF-800A [Right COM]	

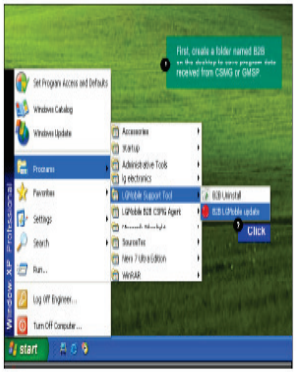

2. . USB COM port Setting

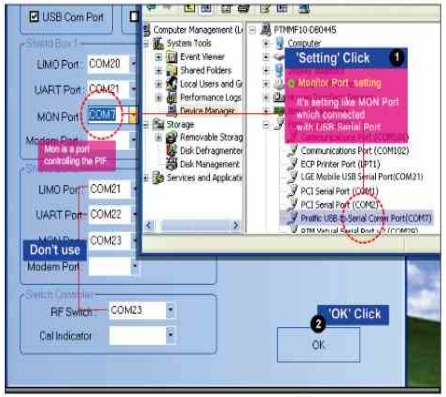

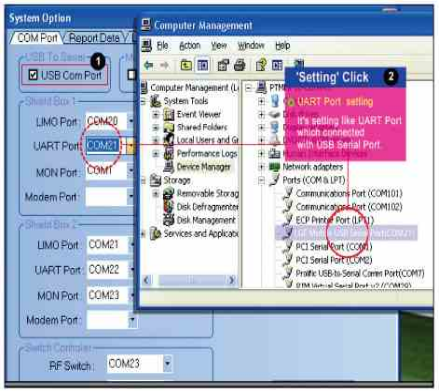

3. Calibration Cable setting

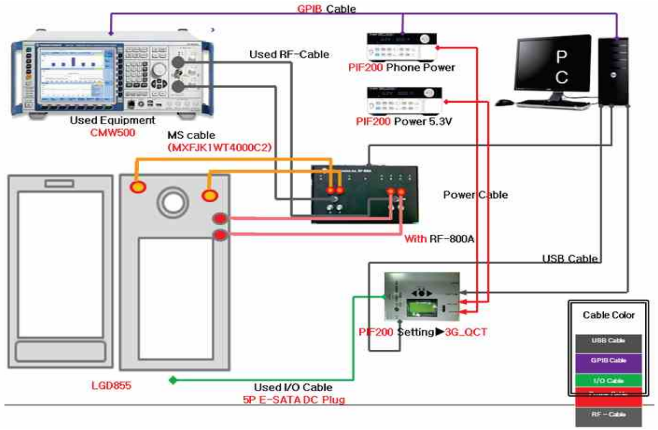

4. Flash tool D/L setting

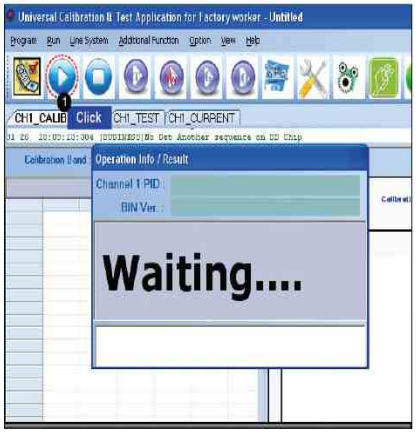

※ If you want more information, please refer B2B's Notification "RF Calibration User Guide".

Copyright © 2015 LG Electronics. Inc. All right reserved. Only training and service purposes

1. Disassemble Screw (11ea)	2. Disassemble Rear cover	3. Disassemble Main Antenna	4. Disassemble Connector
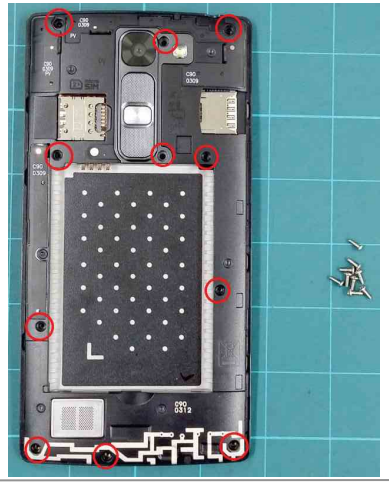	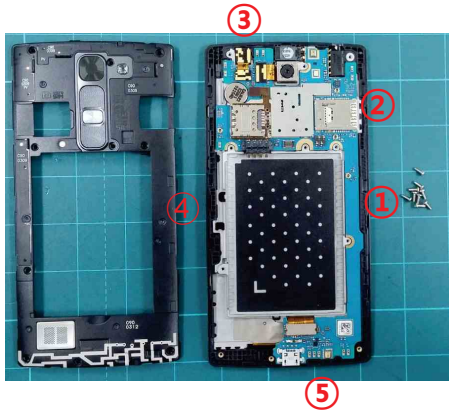		
5. Disassemble Main PCB	**6. Disassemble HW Parts (5ea)**	**7. LCD Disassemble (by Heating machine)**	**8. Complete Disassembling**
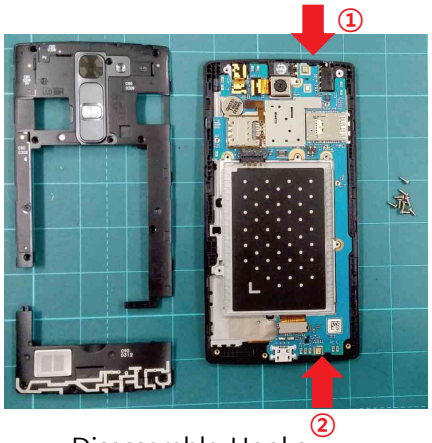 Disassemble Hooks			

Copyright © 2015 LG Electronics. Inc. All right reserved. Only training and service purposes

EXPLODED VIEW

Copyright © 2015 LG Electronics. Inc. All right reserved. Only training and service purposes

Revision				
rev.	Contents	Engineer	Approver	Date
1.0	초도 발행	김한수	김하용	20150701

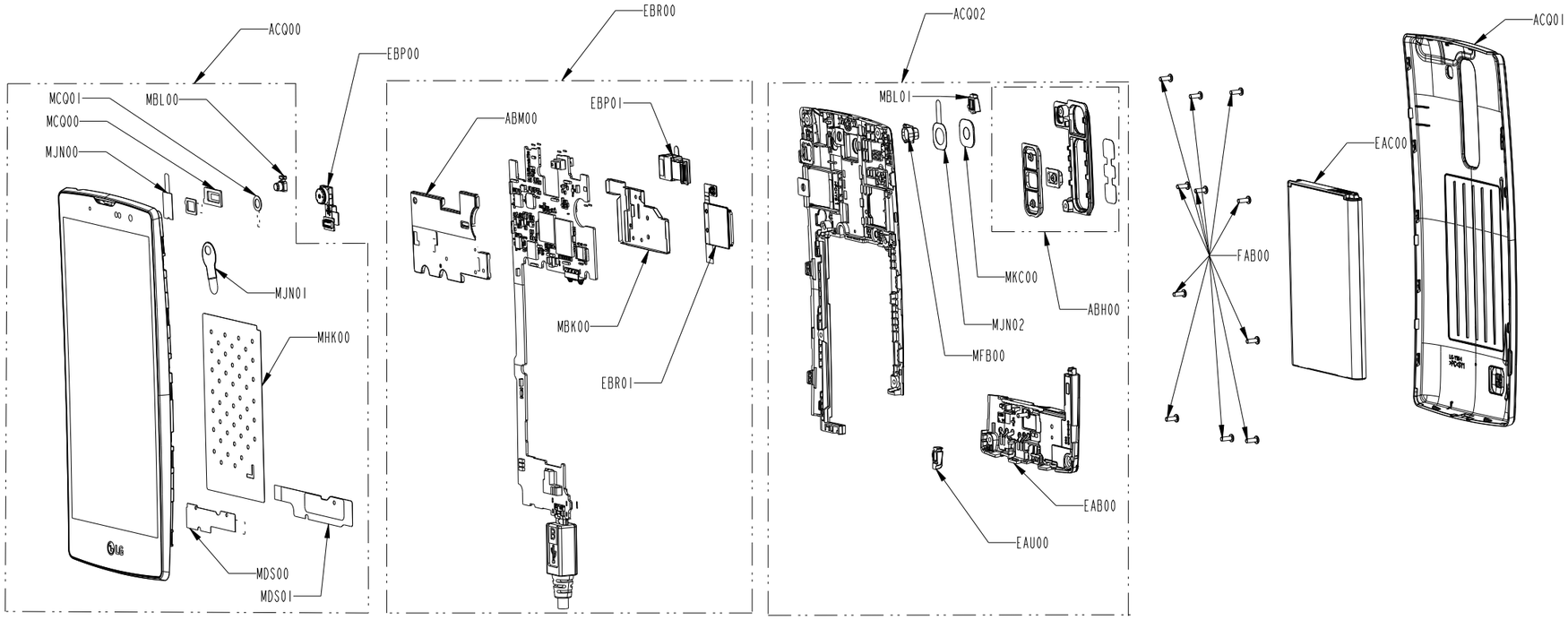

Location	Description	Location	Description	Location	Description
EBP00	Camera Module	ABH00	Button Assembly	ABM00	Can Assembly,Shield
ACQ00	Cover Assembly	MBL01	Cap	ACQ01	Cover Assembly,Battery
MCQ00	Damper	MKC00	Window,Camera	EAC00	Rechargeable Battery,Lithium Ion
MBL00	Cap	MJN02	Tape		
MJN00	Tape	MFB00	Lens,Flash		
MJN01	Tape	EAU00	Cap		
MDS00	Gasket	FAB00	Screw,Machine		
MHK00	Sheet	FAB01	Screw,Tapping		
MDS01	Gasket	EBR00	PCB Assembly,Main		
MCQ01	Damper,Camera	MBK00	Can Assembly,Shield		
ACQ02	Cover Assembly,Rear	EBP01	Camera Module		
EAB00	Speaker Module	EBR01	PCB Assembly,Flexible		

No	Part Name	Part Number	Q'ty	Remark
Material	FALSE			

Unit	Scale	Size	Sheet	Designed By	Model Name	CY90_FRONT_COVER_ASSY
mm	1:1	A3	5/5	김한수 Date	Drawing Name	COVER ASSEMBLY,FRONT
				Approved By Date	Drawing Number	LGH522Y

3rd Angle Projection

Copyright © 2010 by LG Electronics, Inc. All rights reserved.
No part of this publication may be reproduced, stored in a retrieval system, or transmitted in any form or by any means, electronic, mechanical, photocopying, recording, or otherwise, without the prior permission of LG Electronics, Inc.

This part should not contain or exceed maximum allowable concentration level of hazardous substances such as Pb, Cd, Hg, Cr+6, PBB, PBDE, Ni, Br, Cl, PVC, BFR, CFR and REACH SVHC, which are written in LGE's 133 ance manual for management of hazardous substances in product"

No	P/N	Description	Qty	Location no
1	AGQ88734501	Phone Assembly	1	AGQ000000
2	ACQ88542601	Cover Assembly,EMS	1	ACQ100400
3	ACQ87831971	Cover Assembly,Rear	1	ACQ063300
4	ACQ87852471	Cover Assembly,Rear(SVC)	1	ACQ105800
5	ABH75459905	Button Assembly	1	ABH000000
6	MBG65483302	Button	1	MBG000000
7	MBG65562905	Button	1	MBG000001
8	MCR65887705	Decor	1	MCR000000
9	MJN69388701	Tape,Protect	1	MJN061100
10	EAA63826701	PIFA Antenna,GPS	1	EAA030100
11	EAA63826801	PIFA Antenna,RF	1	EAA030103
12	EAA63884601	PIFA Antenna,WiFi	1	EAA030101
13	EAA63884701	PIFA Antenna,RF	1	EAA030102
14	EAX66264501	PCB,Flexible	1	EAX010700
15	MBL66357701	Cap	1	MBL000000
16	MCK68589401	Cover,Rear	1	MCK063300
17	MCQ68166801	Damper,Camera	1	MCQ009400
18	MCQ68166901	Damper,Motor	1	MCQ049800
19	MCQ68545101	Damper	1	MCQ000000
20	MEZ64319901	Label,After Service	1	MEZ000900
21	MFB63813101	Lens,Flash	1	MFB029600
22	MJN69388601	Tape	1	MJN000000
23	MJN69568101	Tape,Protect	1	MJN061100
24	MKC65379201	Window,Camera	1	MKC009400
25	EAB63728601	Speaker Module	1	EAB010100
26	MBL66318301	Cap	1	EAU010000
27	ACQ87832060	Cover Assembly,Bar	1	ACQ003400
28	ACQ88378051	Cover Assembly	1	ACQ000000
29	ACQ87791651	Cover Assembly,Front	1	ACQ032700
30	ACQ87852305	Cover Assembly,Front(Sub)	1	ACQ033200
31	MCK68588905	Cover,Front	1	MCK032700
32	MDQ64336301	Frame	1	MDQ000000
33	MICE0016905	Insert,Nut	4	MET099501
34	MBL66397101	Cap	1	MBL000000
35	MCQ68166701	Damper	1	MCQ000001
36	MCQ68264701	Damper	1	MCQ000000
37	MCR65966502	Decor	1	MCR000000
38	MDS65013401	Gasket	1	MDS000000
39	MHK64907101	Sheet	1	MHK000000
40	MHK64945601	Sheet	1	MHK000001
41	MJN69408301	Tape	1	MJN000001
42	MJN69428101	Tape	1	MJN000000

Copyright © 2015 LG Electronics. Inc. All right reserved. Only training and service purposes

43	MJN69828601	Tape,Protect	2	MJN061100
44	MJN69828602	Tape,Protect	1	MJN061101
45	MJN69828603	Tape,Protect	1	MJN061102
46	EAT62613701	Module,Hybrid Touch LCD	1	EAT130000
47	MCQ68166601	Damper,Camera	1	MCQ009400
48	MDS65190701	Gasket	1	MDS000000
49	EAB63288401	Receiver	1	EAB010400
50	EAG63930601	Jack,Phone	1	EAG140300
51	EAU62283801	Motor,DC	1	EAU010000
52	EBP62481901	Camera Module	1	EBP000000
53	MJN69527608	Tape,USP Film	1	MJN107400
54	MJN69527701	Tape,Protect	1	MJN061100
55	MLAZ0038301	Label	1	MEZ000000
56	EBR81711401	PCB Assembly,Main	1	EBR071900
57	EBR80675101	PCB Assembly,Main,Insert	1	EBR071500
58	ABM74756101	Can Assembly,Shield	1	ABM070302
59	MBK64233001	Can,Shield	1	MBK070300
60	MDS65330701	Gasket	2	MDS000000
61	MEV65654601	Insulator	1	MEV000000
62	ABM75116201	Can Assembly,Shield	1	MBK070300
63	MBK64213501	Can,Shield	1	MBK070300
64	MES63658301	Indicator,LED	1	MES043800
65	BRAH0001305	Resin,PC	0	RAA050100
66	EBP62421801	Camera Module	1	EBP000000
67	EBR76354001	PCB Assembly,Flexible	1	EBR070500
68	EBR76354101	PCB Assembly,Flexible,SMT	1	EBR070400
69	EBR76328601	PCB Assembly,Flexible,SMT Top	1	EBR070300
70	EAG63393301	Connector,BtoB	1	CN9501
71	EAX66307501	PCB,Flexible	1	EAX010700
72	EBR76354201	PCB Assembly,Flexible,SMT Bottom	1	EBR070200
73	EAG64229801	Socket,DIMM/SIMM	1	J9500
74	EBR81021701	PCB Assembly,Flexible,Insert	1	EBR070100
75	MDS65330901	Gasket	1	MDS000000
76	MCQ68365101	Damper	1	MCQ000000
77	EBR81711601	PCB Assembly,Main,SMT	1	EBR071800
78	BRAH0001304	Resin,PC	0	RAA050100
79	EBR81730801	PCB Assembly,Main,SMT Top	1	EBR071700
80	EAE62286801	Capacitor,Ceramic,Chip	1	C1613
81	EAE62487001	Capacitor,Low ESL	1	C3301
82	EAE62502901	Capacitor,Ceramic,Chip	1	C1608
83	EAE62505701	Capacitor,Ceramic,Chip	1	C4702
84	EAE62522101	Capacitor,Ceramic,Chip	1	C1320
85	EAE62762301	Capacitor,Ceramic,Chip	2	C2365,C2375

Copyright © 2015 LG Electronics. Inc. All right reserved. Only training and service purposes

86	EAE62843001	Capacitor,Ceramic,Chip	4	C7500,C7501,C7502,C7504
87	EAE62924001	Capacitor(High Frequency),Ceramic,Chip	1	C5103
88	EAE62945801	Capacitor(High Frequency),Ceramic,Chip	1	L1606
89	EAE62945901	Capacitor(High Frequency),Ceramic,Chip	3	L1217,L1604,L1605
90	EAE62946201	Capacitor(High Frequency),Ceramic,Chip	3	C1301,L1313,L1315
91	EAE62946401	Capacitor(High Frequency),Ceramic,Chip	2	L1308,L1326
92	EAE62946601	Capacitor(High Frequency),Ceramic,Chip	2	C1225,C1230
93	EAE62946801	Capacitor(High Frequency),Ceramic,Chip	1	C5111
94	EAE62946901	Capacitor(High Frequency),Ceramic,Chip	2	C1233,C1604
95	EAE62947001	Capacitor(High Frequency),Ceramic,Chip	2	C1317,C1324
96	EAE62962201	Capacitor(High Frequency),Ceramic,Chip	5	C1331,L1151,L1200,L1600,L1603
97	EAE63067401	Capacitor,Ceramic,Chip	1	C7503
98	EAE63222701	Capacitor,Ceramic,Chip	3	C1319,C1326,C1606
99	EAG63652301	C-Clip	1	ANT102
100	EAG64389801	C-Clip	2	ANT101,ANT103
101	EAG64451301	Connector,Terminal	1	CN5101
102	EAG64451501	Connector,Terminal	1	CN1100
103	EAH61532901	Diode,Switching	1	D9500
104	EAH62033201	Diode,TVS	1	VA6201
105	EAM62252001	Filter,Bead	2	FB5101,FB5102
106	EAM62673701	Filter,Duplexer	1	FL1208
107	EAM62792601	Filter,Separator,Switch	1	FL1405
108	EAM62792701	Filter,Duplexer	1	FL1202
109	EAM62930901	Filter,Duplexer	1	FL1210
110	EAM62955301	Filter,Duplexer	1	FL1203
111	EAM63210001	Filter,Separator,Switch	1	U1101
112	EAM63290701	Filter,Duplexer	1	FL1200
113	EAM63431001	Filter,Duplexer	1	FL1400
114	EAM63450301	Filter,Saw	1	FL1108
115	EAM63730001	Filter,Saw	1	FL5100
116	EAM63830201	Filter,Duplexer	1	FL1600
117	EAM63910601	Filter,Saw	1	FL1117
118	EAM63910701	Filter,Saw	1	FL1204
119	EAN62677301	IC,Charger	1	U4700
120	EAN62702001	IC,Power Amplifier	1	U1300
121	EAN62867801	IC,Power Amplifier	1	U1600
122	EAN62969801	IC,Hall Effect Switch	1	U8700
123	EAN63106301	IC,RF Amplifier	1	FL5102
124	EAN63366602	IC,MCP,eMMC	1	U3300
125	EAN63389001	IC,Digital Baseband Processor,4G	1	U2100
126	EAN63406501	IC,RF Transceiver,4G	1	U1500
127	EAN63486501	IC,WiFi	1	U5100

Copyright © 2015 LG Electronics. Inc. All right reserved. Only training and service purposes

128	EAN63569001	IC,Proximity	1	U8400
129	EAN63688501	IC,DC,DC Converter	1	U7500
130	EAP61767701	Inductor,Multilayer,Chip	1	L1214
131	EAP61866401	Inductor,Multilayer,Chip	3	C1307,L1302,L1327
132	EAP61866601	Inductor,Multilayer,Chip	2	L9500,L9501
133	EAP61866701	Inductor,Multilayer,Chip	3	L5105,L5106,L5119
134	EAP62107801	Inductor,Wire Wound,Chip	1	L7500
135	EAP62107901	Inductor,Multilayer,Chip	1	C1136
136	EAP62108001	Inductor,Multilayer,Chip	1	L1231
137	EAP62108101	Inductor,Multilayer,Chip	5	C1211,C1303,C1601,L1220,L1221
138	EAP62108201	Inductor,Multilayer,Chip	2	C1603,L1226
139	EAP62108301	Inductor,Multilayer,Chip	3	L1237,L1318,L1403
140	EAP62108401	Inductor,Multilayer,Chip	5	C1212,C1213,L1210,L1219,L5116
141	EAP62108501	Inductor,Multilayer,Chip	2	L1236,L1402
142	EAP62108601	Inductor,Multilayer,Chip	4	L1154,L1306,L1312,L1314
143	EAP62108701	Inductor,Multilayer,Chip	2	L1102,L1310
144	EAP62186301	Inductor,Multilayer,Chip	3	C1610,C1611,L1601
145	EAP62225901	Inductor,Multilayer,Chip	2	C1105,C1600
146	EAP62226001	Inductor,Multilayer,Chip	5	C1176,C1178,C1401,L1229,L5114
147	EAP62226101	Inductor,Multilayer,Chip	1	L5109
148	EAP62226201	Inductor,Multilayer,Chip	1	C1300
149	EAP62226301	Inductor,Multilayer,Chip	4	C1312,C1313,L1209,L1227
150	EAP62226401	Inductor,Multilayer,Chip	3	L1203,L1211,L1238
151	EAP62226601	Inductor,Multilayer,Chip	5	C1200,C1202,C1242,C1450,L1223
152	EAP62226701	Inductor,Multilayer,Chip	1	L1202
153	EAP62546201	Inductor,Multilayer,Chip	1	L5120
154	EAP62886101	Inductor,Multilayer,Chip	2	L1330,L5104
155	EAT61914101	Module, FEM(Front End Module)	1	U1200
156	EAT62613601	Module, FEM(Front End Module)	1	U1201
157	EAW61983901	Oscillator,TCXO	1	X5100
158	EAW62743401	Oscillator,VCTCXO	1	X1500
159	EAX66407101	PCB,Main	1	EAX010000
160	EBC61856201	Resistor,Chip	1	R2104
161	EBC62615501	Resistor,Chip	1	R4702
162	ECA30240001	Coupler,RF Directional	2	FL1101,FL1104
163	ECCH0000147	Capacitor,Ceramic,Chip	2	C6207,C6210
164	ECCH0000198	Capacitor,Ceramic,Chip	2	C3302,C3312
165	ECCH0002001	Capacitor,Ceramic,Chip	1	C6226
166	ECCH0005604	Capacitor,Ceramic,Chip	2	C3314,C3315
167	ECCH0009101	Capacitor,Ceramic,Chip	28	C1508,C1509,C2102,C2349,C2350,C2351,C2352,C2356,C2357,C2358,C2359,C2363,C2364,C2366,C2373,C2374,C3303,C3305,C3307,C3308,C3309,C3310,C3311,C3313,C5100,C5108,C8700,C8701

Copyright © 2015 LG Electronics. Inc. All right reserved. Only training and service purposes

168	ECCH0009103	Capacitor,Ceramic,Chip	26	C1133,C1150,C1151,C1152,C1201,C1206,C1207,C1208,C1209,C1210,C1243,C1244,C1310,C1311,C1334,C1337,C1415,C1417,C1418,C1612,C2101,C5107,C5114,C5120,C6209,C9910
169	ECCH0009104	Capacitor,Ceramic,Chip	1	C1177
170	ECCH0009106	Capacitor,Ceramic,Chip	4	C1314,C1605,C1609,C5115
171	ECCH0009109	Capacitor,Ceramic,Chip	1	C1607
172	ECCH0009208	Capacitor,Ceramic,Chip	3	C1330,L1304,L1602
173	ECCH0009211	Capacitor,Ceramic,Chip	2	C1135,C1137
174	ECCH0009216	Capacitor,Ceramic,Chip	3	C1304,C1305,C1602
175	ECCH0009217	Capacitor,Ceramic,Chip	2	C1302,C1308
176	ECCH0009228	Capacitor,Ceramic,Chip	1	C5117
177	ECCH0009502	Capacitor,Ceramic,Chip	1	L1150
178	ECCH0009504	Capacitor,Ceramic,Chip	4	C1123,C1231,C1236,C1309
179	ECCH0009520	Capacitor,Ceramic,Chip	1	C1108
180	ECCH0017301	Capacitor,Ceramic,Chip	12	C2104,C2105,C2354,C2355,C2376,C2377,C2378,C3304,C3306,C5106,C5116,C5119
181	ECCH0017601	Capacitor,Ceramic,Chip	3	C3300,C5105,C6208
182	ECZH0000830	Capacitor,Ceramic,Chip	2	C6202,C6227
183	ECZH0001215	Capacitor,Ceramic,Chip	2	C4700,C4701
184	ECZH0025911	Capacitor,Ceramic,Chip	1	C1161
185	ECZH0025916	Capacitor,Ceramic,Chip	3	C1306,C5127,C5130
186	ECZH0025920	Capacitor,Ceramic,Chip	2	C1153,C1419
187	EDLH0015104	LED,Chip	1	LD9201
188	ERHY0000166	Resistor,Chip	2	R2100,R2101
189	ERHY0009311	Resistor,Chip	1	R1100
190	ERHY0009504	Resistor,Chip	2	R6202,R6204
191	ERHY0009505	Resistor,Chip	5	R1303,R2222,R2224,R2227,R2228
192	ERHY0009507	Resistor,Chip	1	R1137
193	ERHY0009519	Resistor,Chip	1	R1302
194	ERHY0009526	Resistor,Chip	7	R1124,R2200,R2201,R2202,R2203,R2206,R2207
195	ERHZ0000220	Resistor,Chip	1	R2103
196	ERHZ0000250	Resistor,Chip	1	R3309
197	ERHZ0000267	Resistor,Chip	1	R4703
198	ERHZ0000294	Resistor,Chip	1	R2102
199	ERHZ0000401	Resistor,Chip	1	R1501
200	ERHZ0000406	Resistor,Chip	1	R4701
201	ERHZ0000463	Resistor,Chip	1	R6212
202	ERHZ0000484	Resistor,Chip	1	R6207
203	ERHZ0000486	Resistor,Chip	1	R4700
204	ERHZ0000529	Resistor,Chip	1	R6205
205	MBV62321701	Clip	10	SC10001,SC10002,SC10003,SC10004,SC10005,SC10006,SC10007,SC10008,SC20006,SC20008
206	SAFO0000401	Wire Pad,Open	2	R1500,R2214
207	SAFO0000501	Wire Pad,Open	2	R2212,R2213
208	SAFP0000401	Wire Pad,Short	10	R1503,R1504,R2215,R2301,R3301,R5100,R5101,R6217,R7502,R7503
209	SETY0007301	Thermistor,NTC	2	PT2100,PT2101

Copyright © 2015 LG Electronics. Inc. All right reserved. Only training and service purposes

210	SFBH0008101	Filter,Bead	1	FB5100
211	SFBH0008102	Filter,Bead	1	FB6209
212	SFBH0008105	Filter,Bead	2	FB6202,FB6203
213	EBR81748701	PCB Assembly,Main,SMT Bottom	1	EBR071600
214	EAB62950801	Microphone,Condenser	2	MIC6200,MIC6201
215	EAE62286801	Capacitor,Ceramic,Chip	1	C9202
216	EAE62502901	Capacitor,Ceramic,Chip	4	C4227,C4228,C7104,C7105
217	EAE62505701	Capacitor,Ceramic,Chip	1	C4401
218	EAE62506501	Capacitor,Ceramic,Chip	2	C4210,C4212
219	EAE62522101	Capacitor,Ceramic,Chip	1	C4200
220	EAE62685301	Capacitor,Ceramic,Chip	1	C9205
221	EAE62762301	Capacitor,Ceramic,Chip	3	C4114,C7103,C9501
222	EAE62767801	Capacitor,Ceramic,Chip	2	C2341,C4122
223	EAE62843001	Capacitor,Ceramic,Chip	1	C4402
224	EAE62883101	Capacitor(High Frequency),Ceramic,Chip	2	C9207,C9208
225	EAE62945801	Capacitor(High Frequency),Ceramic,Chip	1	C1107
226	EAE62946601	Capacitor(High Frequency),Ceramic,Chip	2	C1159,C1170
227	EAE62962301	Capacitor,Ceramic,Chip	8	C4206,C4207,C4208,C4209,C4214,C4215,C4216,C4217
228	EAE62969601	Capacitor,Ceramic,Chip	1	C4500
229	EAE63941501	Capacitor,TA,Polymer	1	C9201
230	EAG63393201	Connector,BtoB	1	CN9500
231	EAG63530401	Connector,Terminal Block	1	CN1
232	EAG63613001	C-Clip	2	ANT6200,ANT6201
233	EAG63652201	C-Clip	2	ANT5100,ANT5101
234	EAG63772101	Connector,RF	4	SW1100,SW1101,SW1103,SW1105
235	EAG64091101	Socket,DIMM/SIMM	1	S9500
236	EAG64149801	Connector,I/O	1	CN9201
237	EAG64370001	Connector,Terminal Block	1	CN9200
238	EAG64389801	C-Clip	10	ANT1100,ANT1101,ANT1102,ANT1103,ANT1104,ANT1106,ANT1107,ANT1108,ANT5102,ANT5103
239	EAH61872601	Diode,TVS	1	D9206
240	EAH61992701	Diode,Schottky	1	ZD4400
241	EAH62033201	Diode,TVS	1	D6200
242	EAM62071001	Filter,Bead	2	FB4100,FB4101
243	EAM62291101	Filter,EMI/Power	2	FL7103,FL7304
244	EAM62530001	Filter,EMI/Power	3	FL7101,FL7105,FL7303
245	EAM62710701	Filter,Bead	1	FB6208
246	EAM63030601	Filter,Separator,Switch	1	FL1114
247	EAM63930901	Filter,Saw	1	FL1115
248	EAN62572401	IC,DC,DC Converter	1	U4400
249	EAN62637201	IC,Acceleration Sensor	1	U8100
250	EAN63546901	IC,PMIC	1	U4100
251	EAN63706801	IC,DC,DC Converter	1	U4200

Copyright © 2015 LG Electronics. Inc. All right reserved. Only training and service purposes

252	EAP61866601	Inductor,Multilayer,Chip	1	L1171
253	EAP61866701	Inductor,Multilayer,Chip	1	L1115
254	EAP62106301	Inductor,Wire Wound,Chip	1	L4400
255	EAP62108001	Inductor,Multilayer,Chip	2	C1164,C1197
256	EAP62108201	Inductor,Multilayer,Chip	1	C1149
257	EAP62108601	Inductor,Multilayer,Chip	1	L1160
258	EAP62225901	Inductor,Multilayer,Chip	3	C1116,L1166,L1170
259	EAP62226201	Inductor,Multilayer,Chip	1	L1140
260	EAP62226401	Inductor,Multilayer,Chip	1	L1113
261	EAP62546001	Inductor,Multilayer,Chip	4	L4203,L4204,L4205,L4206
262	EAP62686901	Inductor,Multilayer,Chip	1	L1158
263	EAP62886101	Inductor,Multilayer,Chip	1	L1161
264	EAP62906001	Inductor,Wire Wound,Chip	2	L6201,L6202
265	EAP63067001	Inductor,Multilayer,Chip	1	L1169
266	EAP63107201	Inductor,Multilayer,Chip	2	L4200,L4201
267	EAP63146501	Inductor,Multilayer,Chip	1	L4202
268	EAP63166001	Inductor,Wire Wound,Chip	2	L4207,L4208
269	EAP63185901	Inductor,Multilayer,Chip	1	L4500
270	EAV63012101	LED,Flash	1	LD4500
271	EBC62316201	Resistor,Chip	1	R1109
272	EBC62858401	Resistor,Chip	2	R1121,R1125
273	ECCH0000115	Capacitor,Ceramic,Chip	2	C4121,C9206
274	ECCH0000117	Capacitor,Ceramic,Chip	1	C4120
275	ECCH0000196	Capacitor,Ceramic,Chip	1	L1134
276	ECCH0000198	Capacitor,Ceramic,Chip	13	C1503,C2303,C2323,C2380,C4118,C4119,C4224,C4225,C7300,C7301,C7303,C7400,C7401
277	ECCH0002001	Capacitor,Ceramic,Chip	3	C6221,C8100,C8101
278	ECCH0004904	Capacitor,Ceramic,Chip	1	C9507
279	ECCH0005604	Capacitor,Ceramic,Chip	3	C2302,C2324,C2367
280	ECCH0006201	Capacitor,Ceramic,Chip	4	C2360,C2362,C2372,C9505
281	ECCH0007804	Capacitor,Ceramic,Chip	1	C4112
282	ECCH0009101	Capacitor,Ceramic,Chip	19	C1500,C1501,C1502,C1504,C1505,C1506,C1507,C2347,C2348,C2353,C2361,C2368,C2369,C2370,C2371,C4113,C4117,C8400,C8401
283	ECCH0009103	Capacitor,Ceramic,Chip	29	C1100,C1102,C1104,C1124,C1129,C1130,C1131,C1132,C1145,C1146,C1147,C1156,C1160,C1162,C1165,C1171,C1179,C1182,C1196,C1199,C4123,C4124,C5104,C5121,C5128,C5129,C7100,C7101,C9203
284	ECCH0009104	Capacitor,Ceramic,Chip	3	C1115,C1192,C1193
285	ECCH0009106	Capacitor,Ceramic,Chip	1	C1191
286	ECCH0017301	Capacitor,Ceramic,Chip	35	C2100,C2103,C2304,C2308,C2309,C2311,C2313,C2314,C2316,C2317,C2318,C2321,C2327,C2328,C2329,C2331,C2332,C2335,C4104,C4105,C4106,C4107,C4108,C4109,C4110,C4111,C4115,C4116,C4201,C4202,C4203,C4220,C4221,C4226,C7106
287	ECCH0017501	Capacitor,Ceramic,Chip	7	C2300,C2301,C2325,C2326,C2339,C2343,C2344
288	ECCH0017601	Capacitor,Ceramic,Chip	4	C4222,C4223,C7302,C7402
289	ECZH0000813	Capacitor,Ceramic,Chip	1	C1101

Copyright © 2015 LG Electronics. Inc. All right reserved. Only training and service purposes

290	ECZH0000830	Capacitor,Ceramic,Chip	6	C6201,C6223,C6224,C6225,C6228,C6229
291	ECZH0001215	Capacitor,Ceramic,Chip	10	C4100,C4101,C4102,C4103,C4211,C4213,C4218,C4219,C4230,C9204
292	ECZH0025916	Capacitor,Ceramic,Chip	4	C5101,C5122,C6222,C9504
293	ELCH0001444	Inductor,Multilayer,Chip	3	L6200,L6203,L6204
294	ELCH0003841	Inductor,Multilayer,Chip	1	L1132
295	ELCH0004717	Inductor,Multilayer,Chip	1	L1106
296	ENBY0034201	Connector,BtoB	1	CN7400
297	ENBY0036001	Connector,BtoB	1	CN7100
298	ENBY0040701	Connector,BtoB	1	CN7300
299	ERHY0000254	Resistor,Chip	3	R1107,R1108,R9213
300	ERHY0000298	Resistor,Chip	2	R1122,R1128
301	ERHY0003201	Resistor,Chip	1	R9207
302	ERHY0003301	Resistor,Chip	1	R9214
303	ERHY0009302	Resistor,Chip	1	R9211
304	ERHY0009316	Resistor,Chip	6	R1129,R1131,R1133,R1135,R5102,R5104
305	ERHY0009503	Resistor,Chip	4	R1507,R1508,R9202,R9208
306	ERHY0009504	Resistor,Chip	2	R1502,R1513
307	ERHY0009505	Resistor,Chip	5	R1123,R1127,R7100,R7101,R7532
308	ERHY0009506	Resistor,Chip	1	R7102
309	ERHY0009507	Resistor,Chip	5	R1130,R1132,R1134,R1136,R9515
310	ERHY0009526	Resistor,Chip	2	R1126,R8400
311	ERHY0009531	Resistor,Chip	1	R1506
312	ERHY0009537	Resistor,Chip	1	R1115
313	ERHY0009553	Resistor,Chip	2	R5103,R5105
314	ERHY0035601	Resistor,Chip	1	R9221
315	ERHZ0000204	Resistor,Chip	2	R2114,R9222
316	ERHZ0000205	Resistor,Chip	1	R4104
317	ERHZ0000236	Resistor,Chip	1	R1509
318	ERHZ0000287	Resistor,Chip	1	R6201
319	ERHZ0000288	Resistor,Chip	1	R6200
320	ERHZ0000295	Resistor,Chip	1	R4102
321	ERHZ0000308	Resistor,Chip	1	R9210
322	ERHZ0000402	Resistor,Chip	1	R9508
323	ERHZ0000405	Resistor,Chip	1	R2216
324	ERHZ0000441	Resistor,Chip	1	R9521
325	ERHZ0000463	Resistor,Chip	1	R6213
326	ERHZ0000484	Resistor,Chip	1	R6206
327	ERHZ0000529	Resistor,Chip	2	R4101,R4105
328	ERHZ0000538	Resistor,Chip	2	R4100,R9223
329	EXXY0018701	Crystal	1	X4100
330	MBV62321701	Clip	7	SC10000,SC20000,SC20001,SC20002,SC20003,SC20004,SC20005
331	MEZ65049701	Label	1	PID1

Copyright © 2015 LG Electronics. Inc. All right reserved. Only training and service purposes

332	FAB31918701	Screw,Machine	11	FAB010000
333	FAB32218901	Screw,Tapping	0	FAB020000
334	MEZ64615406	Label,Approval	1	MEZ002100
335	MJN69527603	Tape,USP Film	1	MJN107400
336	SAF30821601	Software Assembly,Common	1	SAF010100
337	SAD35268201	Software,Application	1	SAD010100
338	SAD35451501	Software,USB Driver	1	SAD010500
339	SAD35491701	Software,OSP	1	SAD010600
340	AAD87375201	Addition Assembly	1	AAD000000
341	ACQ88371001	Cover Assembly,Battery	1	ACQ004100
342	MCK68549401	Cover,Battery	1	MCK004100
343	EAB62808211	Earphone,Stereo	1	EAB010200
344	EAC62018207	Rechargeable Battery,Lithium Ion	1	EAC020100
345	EAD62377902	Cable,Assembly	1	EAD010000
346	EAY62751801	Adapters	1	EAY060000
347	MBM65178201	Card,Quick Reference	1	MBM062600
348	MFL69182801	Manual,Operation	0	MFL053800
349	AGF78179301	Package Assembly	1	AGF000000
350	MAF63149903	Bag,Vinyl	1	MAF086500
351	MAY66007601	Box,Master	0	MAY047100
352	MAY66232701	Box,Carton	0	MAY010800
353	MAY66232702	Box,Carton	0	MAY010801
354	MAY66232703	Box,Carton	0	MAY010802
355	MBEC0002901	Box,Carton	0	MAY010803
356	MEZ63874703	Label,Unit Box	2	MEZ084100
357	MEZ64781701	Label,Master Box	0	MEZ047200
358	MEZ65015204	Label,Unit Box	1	MEZ084101
359	MJN68155201	Tape	0	MJN000000
360	MPCY0019330	Pallet	0	MGA000000
361	MAY66471607	Box,Carton	0	MAY010800
362	MAY66471721	Box,Pallet Sleeve	0	MAY115200
363	MBL65957705	Cap,Box	0	MBL007001
364	MLAJ0004402	Label,Master Box	0	MEZ047200
365	MLAZ0050901	Label	0	MEZ000000
366	MPCY0012403	Pallet	0	MGA000000
367	MAF63267402	Bag,Vinyl	1	MAF086500
368	MAY66470404	Box,Master	0	MAY047100
369	MAY67287719	Box,Unit	1	MAY084000
370	MEZ64571201	Label,Unit Box	1	MEZ084000
371	MEZ64686921	Label,Unit Box	1	MEZ084100
372	MLAC0004541	Label,Barcode	1	MEZ084101
373	MLAJ0004402	Label,Master Box	0	MEZ047200

Copyright © 2015 LG Electronics. Inc. All right reserved. Only training and service purposes

P/N : FLXXXXXXXX(X.X)